Video Cassette Recorder · Deck: Turbo Drive Paolina Hifi

Service
Service
Service

VR666/02/16/39
VR668/02/05/06/16/39
VR768/02/05/16/39/59
VR967/02/16/39/58
VR969/02/05/16/39/58

VR668

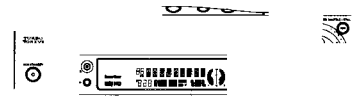

VR768

VR967

Service Manual

Contents

Chapter

1 Table of contents per page
Survey of features
Survey of PCBs and PCB location
Technical data
Safety instructions
Supplementary service information
Front/rear view of the video recorder
Description of the controls and connections and direction for use

2 Error diagnosis system
Servicing of SMD's
Dismantling of the set
Circuit description

3 Electrical adjustment instructions
Survey of abbreviations used
Wiring diagram
Block diagram
PCB layout
Circuit diagrams
Measurements

4 Tape deck documentation
Adjustments
Exploded view of the tape deck
Parts list tape deck

5 Cabinet exploded view
Parts lists cabinet and PCB's

Safety regulations require that the set be restored to its original condition and that parts which are identical with those specified be used.

Survey of types:

VR666: VHS
VR668: VHS, Front connectors
VR768: VHS, Jog/Shuttle, Flying Erase Head
VR967: S-VHS, Jog/Shuttle,
VR969: S-VHS, Jog/Shuttle, Flying Erase Head, RS232

Survey of versions:

/02	PAL B/G German Stereo
/05	PAL I, NICAM
/16	PAL B/G, NICAM & German Stereo
/39	PAL B/G & SECAM L, NICAM
/58	PAL B/G & SECAM DK
/59	PAL B/G & SECAM DK

Survey of remote controls:

VR666	englisch:	RT167/101	4822 218 10757
	french (/39):	RT167/104	4822 218 10758
VR668, VR768, VR967, VR969	english:	RT567/101	4822 219 10084
	french (/39):	RT567/104	4822 219 10085

Survey of tape decks:

VR66x PAL:	WDMT-P4/2	4 Video+ 2 FM-Audio Heads
VR66x SECAM:	WDMT-S4/2	4 Video+ 2 FM-Audio Heads
VR768 PAL:	WDMT-P4/2/1 S	4 Video+ 2 FM-Audio Heads, Jog/Shuttle, Fl. Erase Head
VR768 SECAM:	WDMT-S4/2/1 S	4 Video+ 2 FM-Audio Heads, Jog/Shuttle, Fl. Erase Head
VR967:	WDMT-P4/2 SV	S-VHS, 4 Video+ 2 FM-Audio Heads, Jog/Shuttle
VR969:	WDMT-P4/2/1 SV	S-VHS, 4 Video+ 2 FM-Audio Heads, Jog/Shuttle, Flying Erase Head

Published by GH0896 Videq Service Department Printed in the Netherlands © Copyright reserved Subject to modification GB 4822 726 15475

PCS 76610 GB

Wiring Diagram VHS

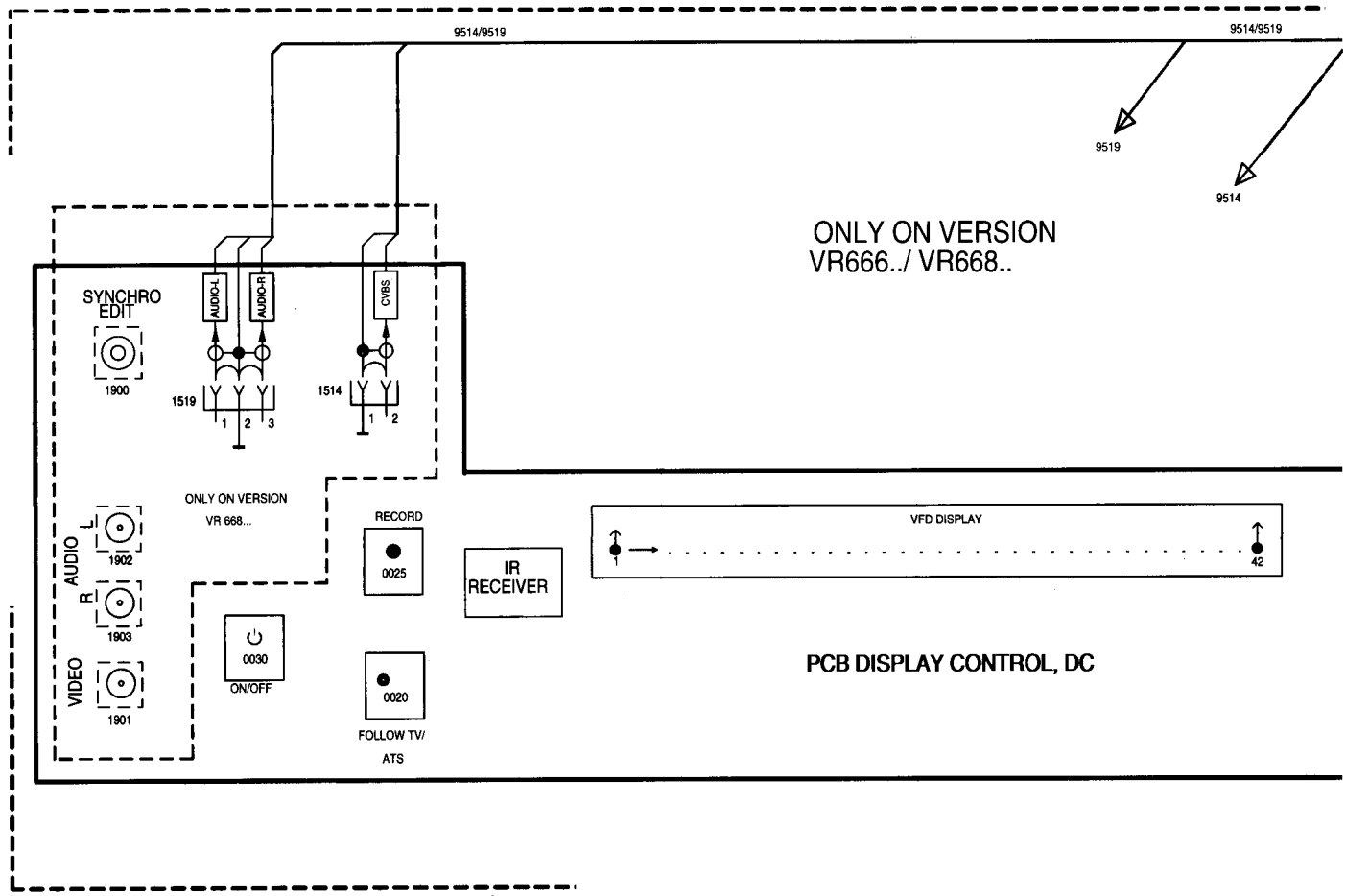

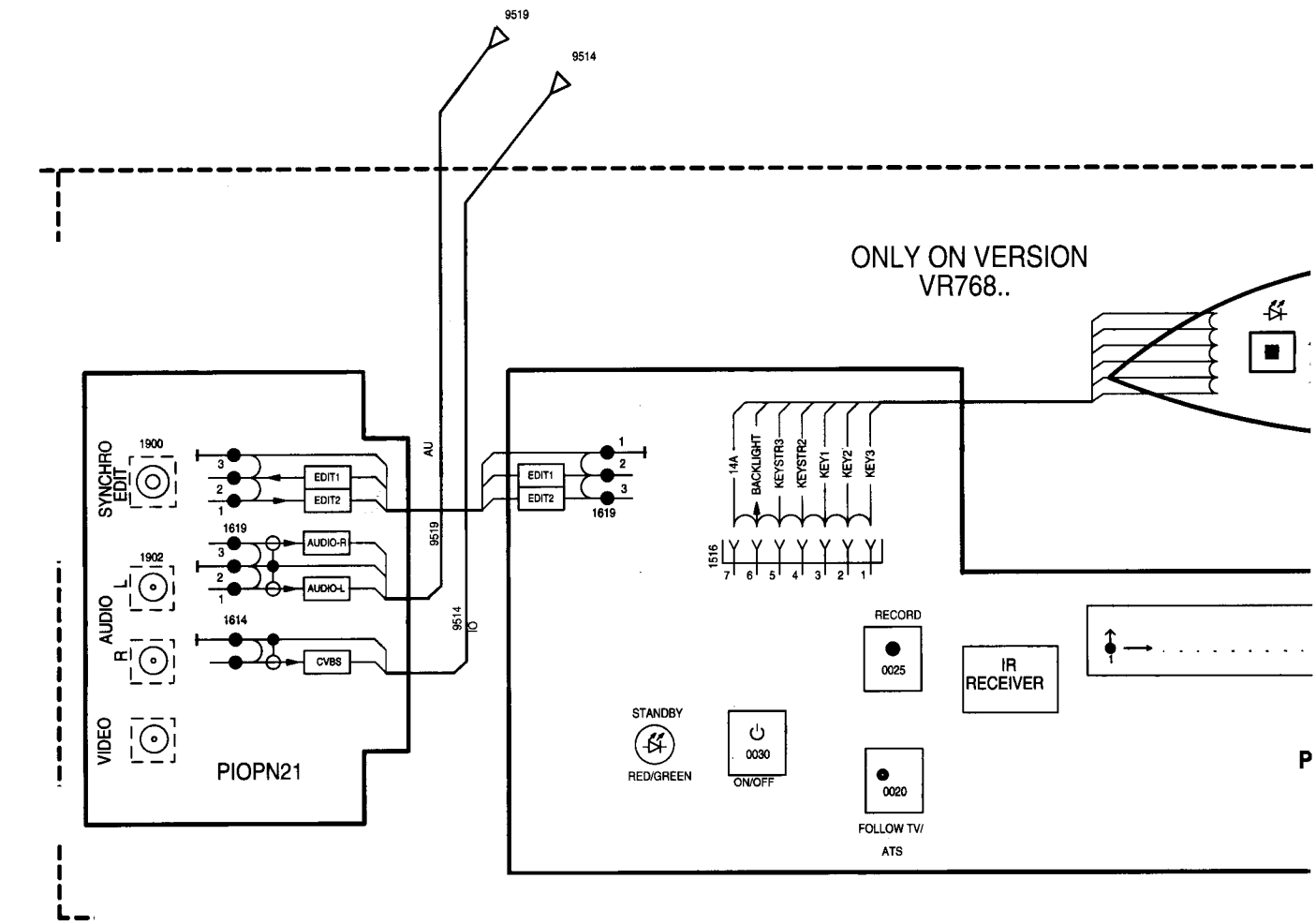

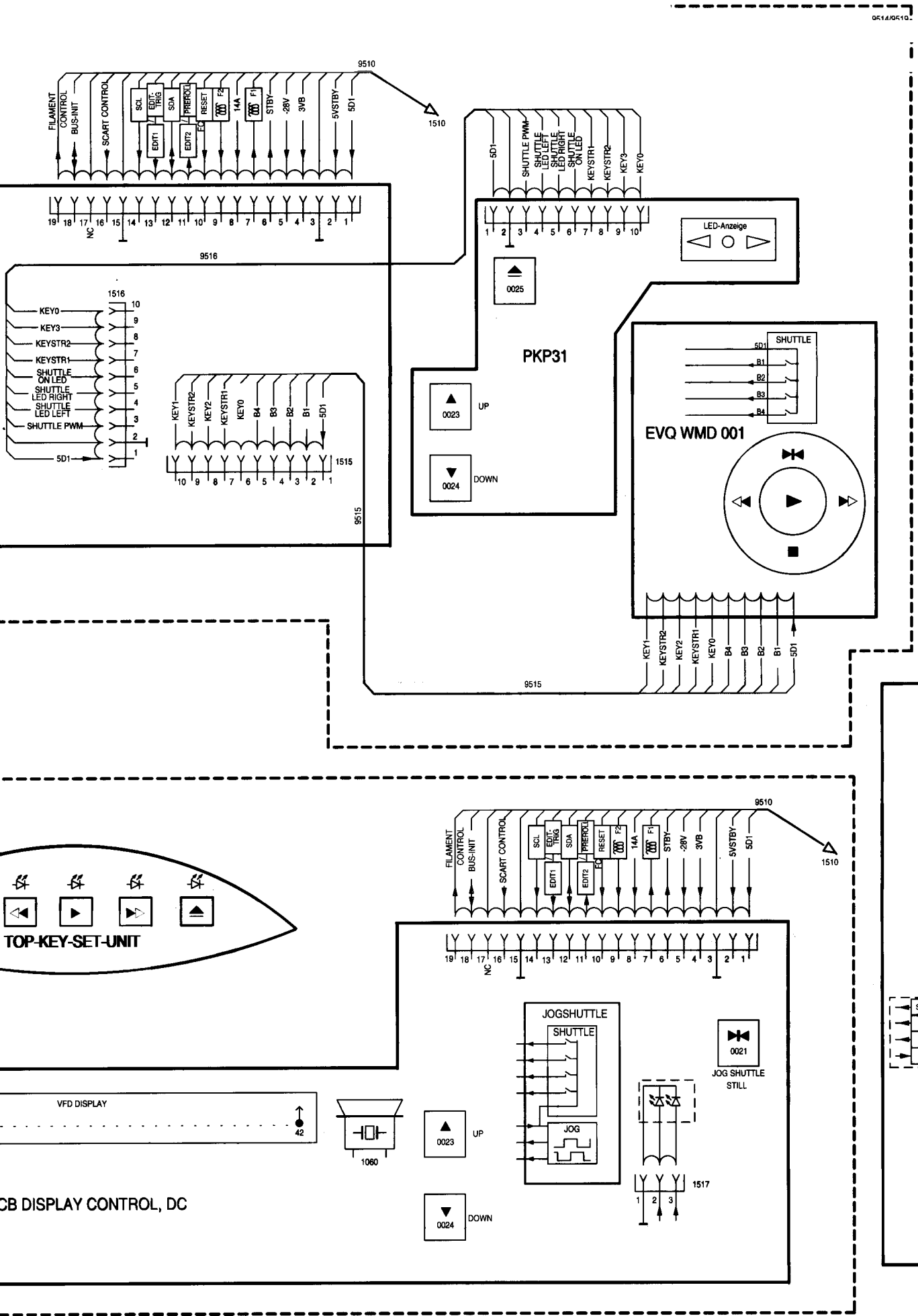
9510
1510
FILAMENT
CONTROL
BUS-INIT
SCART CONTROL
SCL
EDIT-TRIG
SDA
PREROLL
RESET
F2
14A
F1
STBY
-28V
3VB
5VSTBY
5D1
EDIT1
EDIT2
EQ
19 18 17 16 15 14 13 12 11 10 9 8 7 6 5 4 3 2 1
NC
9516
1516
KEY0
KEY3
KEYSTR2
KEYSTR1
SHUTTLE ON LED
SHUTTLE LED RIGHT
SHUTTLE LED LEFT
SHUTTLE PWM
5D1
KEY1
KEY2
B4
B3
B2
B1
1515
9515
SHUTTLE PWM
SHUTTLE LED LEFT
SHUTTLE LED RIGHT
SHUTTLE ON LED
KEYSTR1
KEYSTR2
KEY3
KEY0
1 2 3 4 5 6 7 8 9 10
LED-Anzeige
0025
PKP31
0023
UP
0024
DOWN
EVQ WMD 001
SHUTTLE
B1
B2
B3
B4
KEY1
KEYSTR2
KEY2
KEYSTR1
KEY0
B4
B3
B2
B1
5D1
9515
PCB
10
15
16
ONLY
EURO
STROBE
DATA
CLOCK
DATA
TOP-KEY-SET-UNIT
9510
1510
FILAMENT
CONTROL
BUS-INIT
SCART CONTROL
SCL
EDIT-TRIG
SDA
PREROLL
RESET
F2
14A
F1
STBY
-28V
3VB
5VSTBY
5D1
EDIT1
EDIT2
EQ
19 18 17 16 15 14 13 12 11 10 9 8 7 6 5 4 3 2 1
NC
JOGSHUTTLE
SHUTTLE
JOG
0021
JOG SHUTTLE STILL
1517
1 2 3
VFD DISPLAY
42
1060
0023
UP
0024
DOWN
CB DISPLAY CONTROL, DC

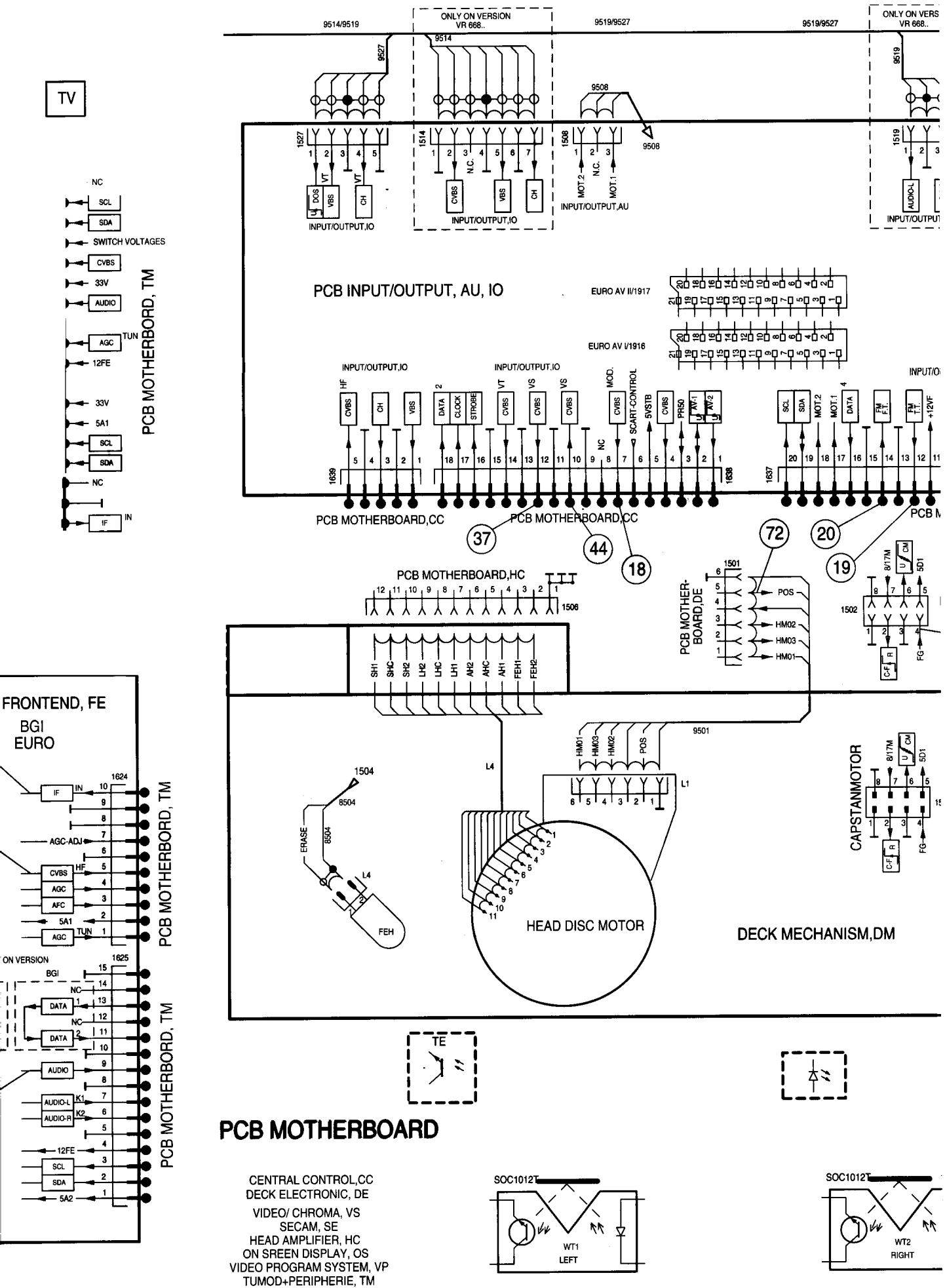
TV
NC
SCL
SDA
SWITCH VOLTAGES
CVBS
33V
AUDIO
TUN
AGC
12FE
33V
5A1
SCL
SDA
NC
IF
IN
PCB MOTHERBORD, TM
FRONTEND, FE
BGI
EURO
IF
IN
1624
AGC-ADJ
CVBS
HF
AGC
AFC
5A1
AGC
TUN
ON VERSION
BGI
1625
NC
DATA
NC
DATA
AUDIO
AUDIO-L
K1
AUDIO-R
K2
12FE
SCL
SDA
5A2
PCB MOTHERBORD, TM
9514/9519
ONLY ON VERSION VR 668..
9519/9527
9519/9527
ONLY ON VERS VR 668..
9527
9514
9508
9508
1527
1514
1508
1519
INPUT/OUTPUT,IO
INPUT/OUTPUT,IO
INPUT/OUTPUT,AU
INPUT/OUTPUT
PCB INPUT/OUTPUT, AU, IO
EURO AV II/1917
EURO AV I/1916
INPUT/OUTPUT,IO
INPUT/OUTPUT,IO
1639
1638
1637
PCB MOTHERBOARD,CC
PCB MOTHERBOARD,CC
PCB M
37
44
18
72
20
19
PCB MOTHERBOARD,HC
1506
1501
PCB MOTHER-BOARD,DE
POS
HM02
HM03
HM01
1502
8/17M
5D1
FG
SH1
SHC
SH2
LH2
LHC
LH1
AH2
AHC
AH1
FEH1
FEH2
9501
HM01
HM03
HM02
POS
L1
1504
8504
ERASE
8504
L4
L4
FEH
HEAD DISC MOTOR
DECK MECHANISM,DM
CAPSTANMOTOR
8/17M
5D1
FG
TE
PCB MOTHERBOARD
CENTRAL CONTROL,CC
DECK ELECTRONIC, DE
VIDEO/ CHROMA, VS
SECAM, SE
HEAD AMPLIFIER, HC
ON SREEN DISPLAY, OS
VIDEO PROGRAM SYSTEM, VP
TUMOD+PERIPHERIE, TM
SOC1012T
WT1
LEFT
SOC1012T
WT2
RIGHT

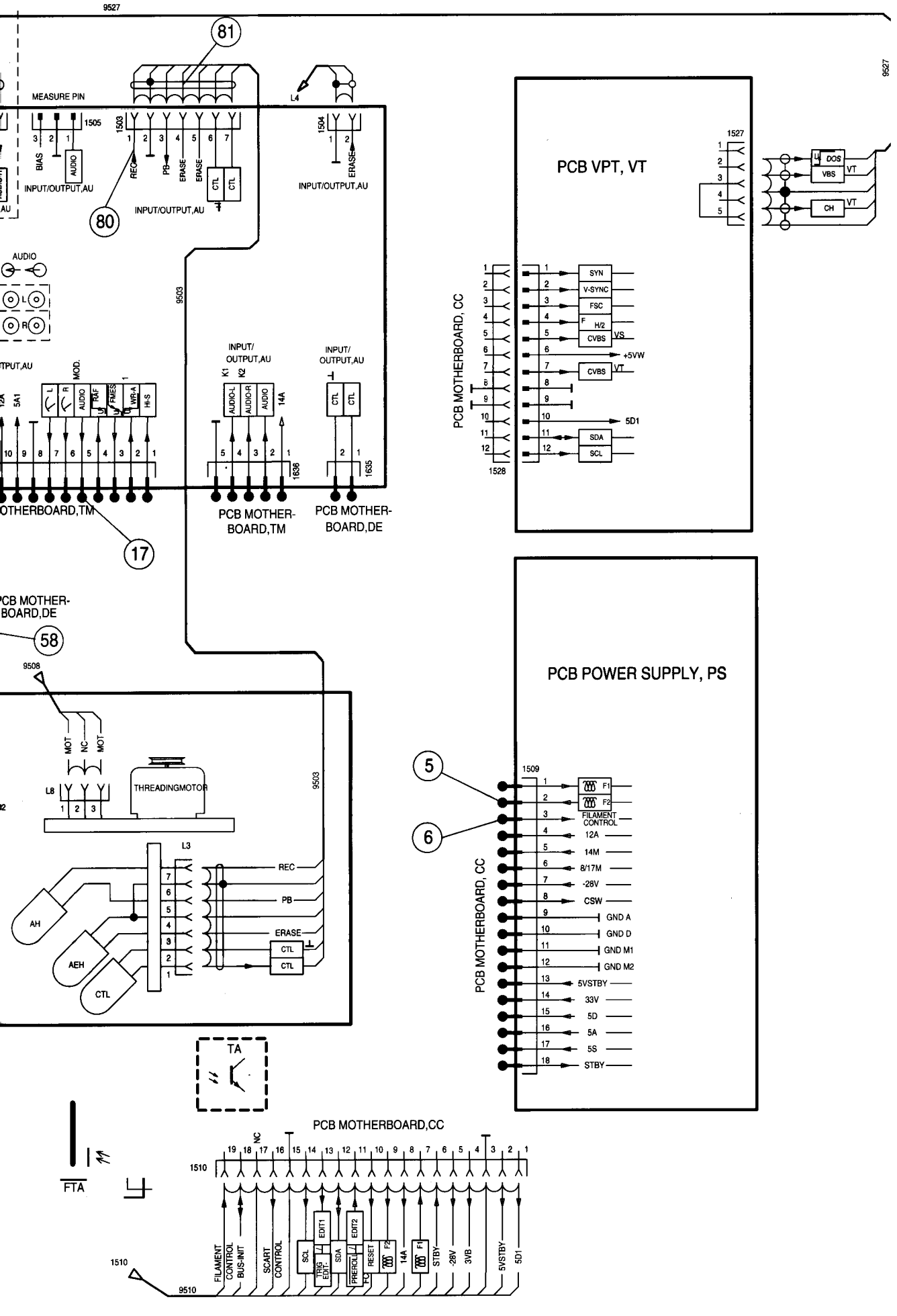
9527
81
MEASURE PIN
L4
1505
1503
1504
BIAS
AUDIO
REC
PB
ERASE
ERASE
CTL
CTL
INPUT/OUTPUT,AU
INPUT/OUTPUT,AU
INPUT/OUTPUT,AU
80
AUDIO
L
R
9503
INPUT/
OUTPUT,AU
INPUT/
OUTPUT,AU
MOD.
K1
K2
AUDIO-L
AUDIO-R
AUDIO
14A
CTL
CTL
1636
1635
PCB MOTHER-
BOARD,TM
PCB MOTHER-
BOARD,DE
17
PCB MOTHER-
BOARD,DE
58
9508
MOT
NC
MOT
L8
THREADINGMOTOR
9503
L3
REC
PB
ERASE
CTL
CTL
AH
AEH
CTL
TA
FTA
PCB MOTHERBOARD,CC
NC
1510
FILAMENT
CONTROL
BUS-INIT
SCART
CONTROL
SCL
EDIT1
TRIG
EDIT
SDA
EDIT2
PREROLL
RESET
F2
14A
F1
STBY
-28V
3VB
5VSTBY
5D1
1510
9510
PCB VPT, VT
1527
DOS
VBS
VT
CH
VT
PCB MOTHERBOARD, CC
SYN
V-SYNC
FSC
H/2
CVBS
VS
+5VW
CVBS
VT
5D1
SDA
SCL
1528
PCB POWER SUPPLY, PS
5
6
1509
F1
F2
FILAMENT
CONTROL
12A
14M
8/17M
-28V
CSW
GND A
GND D
GND M1
GND M2
5VSTBY
33V
5D
5A
5S
STBY
PCB MOTHERBOARD, CC

Wiring Diagram VR967

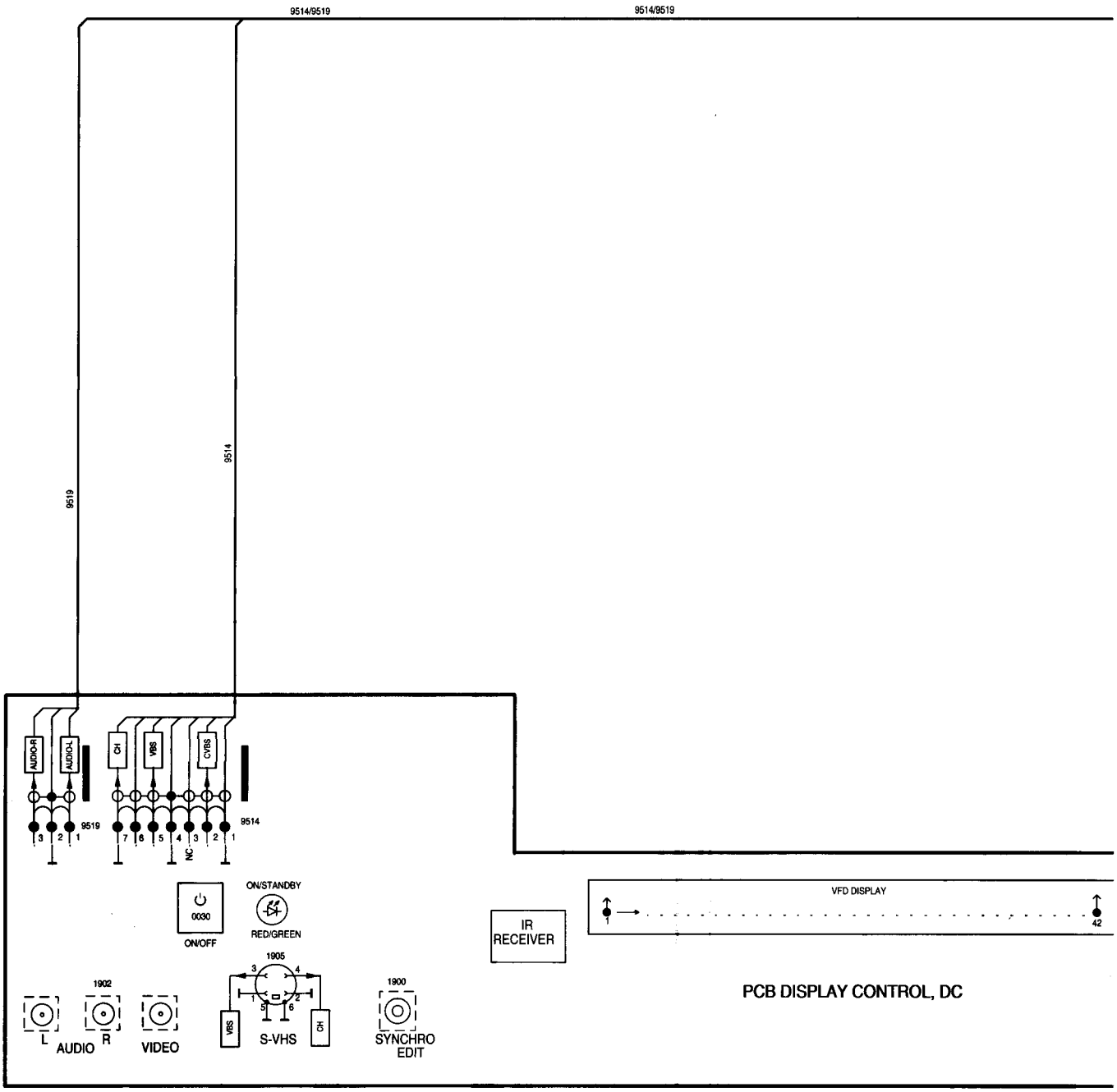

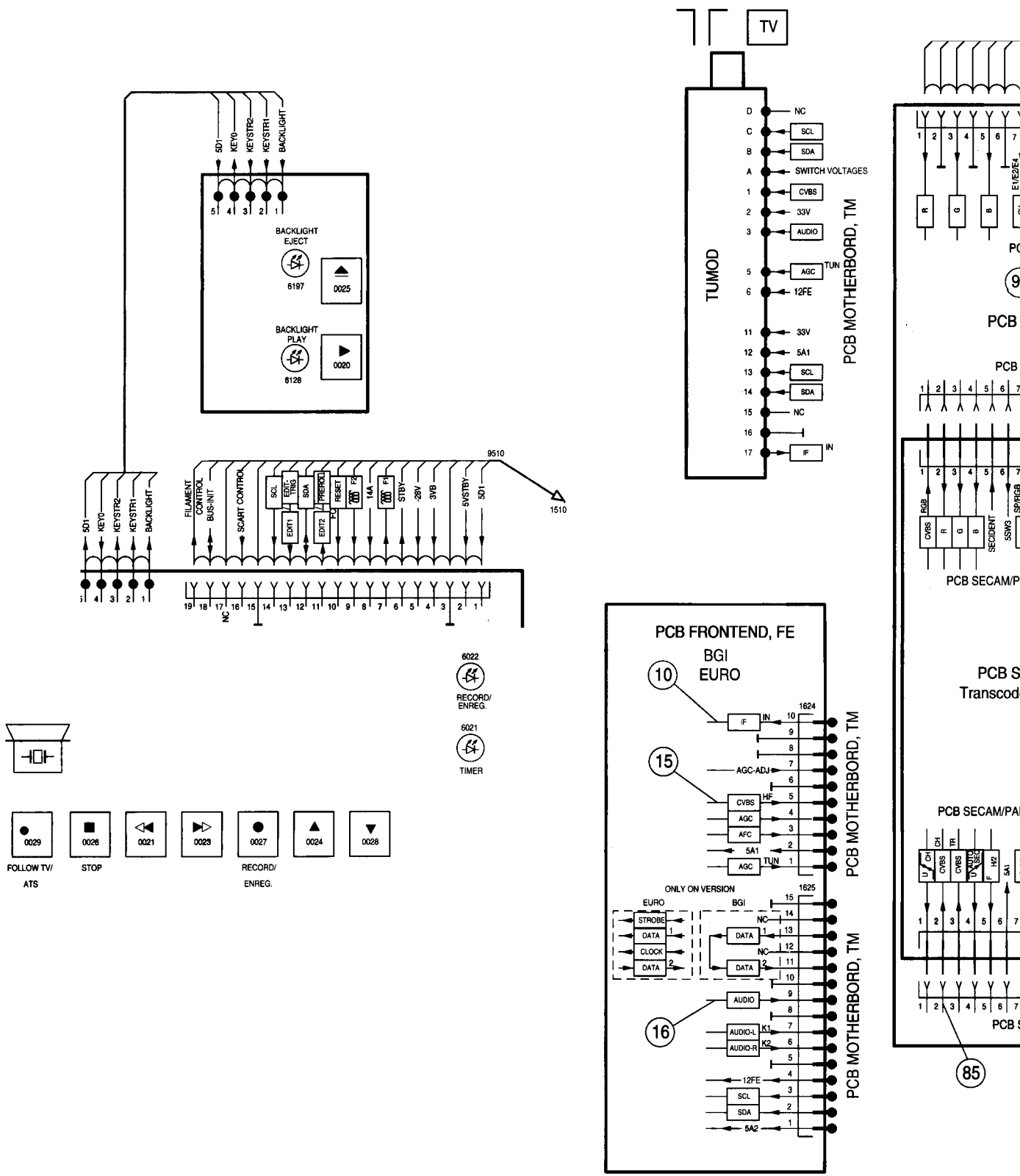
TV
TUMOD
PCB MOTHERBORD, TM
D NC
C SCL
B SDA
A SWITCH VOLTAGES
1 CVBS
2 33V
3 AUDIO
5 AGC TUN
6 12FE
11 33V
12 5A1
13 SCL
14 SDA
15 NC
16
17 IF IN
5D1
KEY0
KEYSTR2
KEYSTR1
BACKLIGHT
BACKLIGHT EJECT
6197
0025
BACKLIGHT PLAY
6128
0020
9510
1510
FILAMENT CONTROL
BUS-INIT
SCART CONTROL
SCL
EDIT-TRIG
SDA
PREROL
RESET
14A
STBY
-28V
9V8
5VSTBY
EDIT1
EDIT2
PCB FRONTEND, FE
BGI
EURO
10
15
16
IF
AGC-ADJ
CVBS
AGC
AFC
5A1
TUN
HF
1624
1625
ONLY ON VERSION
STROBE
DATA
CLOCK
AUDIO
AUDIO-L
AUDIO-R
K1
K2
12FE
SCL
SDA
5A2
6022
RECORD/ ENREG.
6021
TIMER
0029
FOLLOW TV/ ATS
0026
STOP
0021
0023
0027
RECORD/ ENREG.
0024
0028
PCB SECAM/P
PCB S
Transcod
PCB SECAM/PAL
85

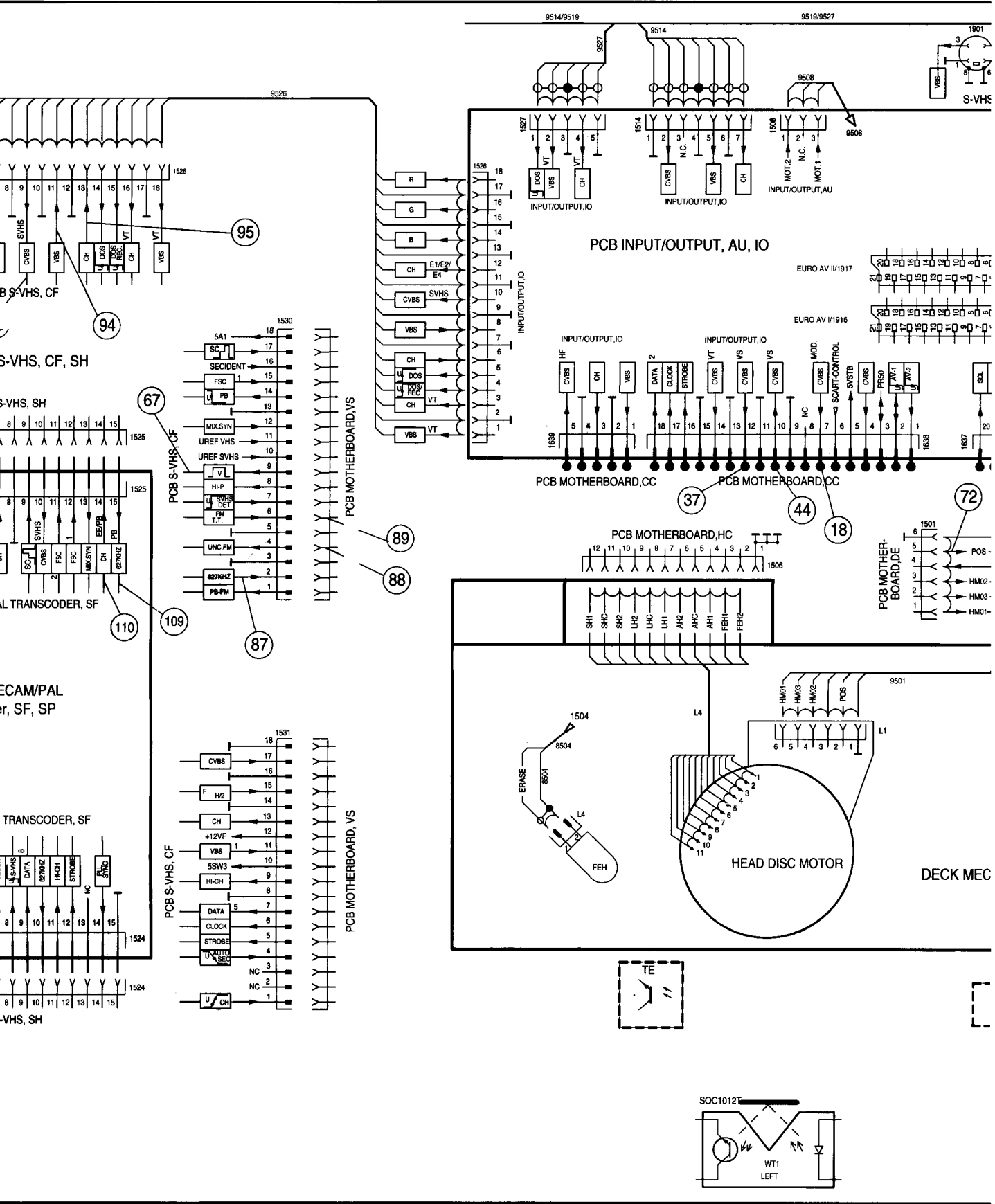

9514/9519
9519/9527
9514
9527
9508
1901
S-VHS
1527
1514
1508
INPUT/OUTPUT,IO
INPUT/OUTPUT,IO
INPUT/OUTPUT,AU
PCB INPUT/OUTPUT, AU, IO
EURO AV II/1917
EURO AV I/1916
INPUT/OUTPUT,IO
INPUT/OUTPUT,IO
PCB MOTHERBOARD,CC
PCB MOTHERBOARD,CC
PCB MOTHERBOARD,HC
1506
PCB MOTHER-BOARD,DE
1501
POS
HM02
HM03
HM01
9501
HM01
HM03
HM02
POS
L4
L1
1504
8504
ERASE
FEH
HEAD DISC MOTOR
DECK MEC
TE
9526
1526
95
94
S-VHS, CF
S-VHS, CF, SH
S-VHS, SH
1525
1530
5A1
SECIDENT
FSC
PB
MIX.SYN
UREF VHS
UREF SVHS
HI-P
SVHS DET
FM T.T.
UNC.FM
627KHZ
PB-FM
67
89
88
87
PCB S-VHS, CF
PCB MOTHERBOARD,VS
L TRANSCODER, SF
ECAM/PAL
er, SF, SP
TRANSCODER, SF
1524
1531
CVBS
H/2
CH
+12VF
VBS
5SW3
HI-CH
DATA
CLOCK
STROBE
AUTO SEC
NC
CH
PCB S-VHS, CF
PCB MOTHERBOARD, VS
-VHS, SH
SOC1012T
WT1
LEFT

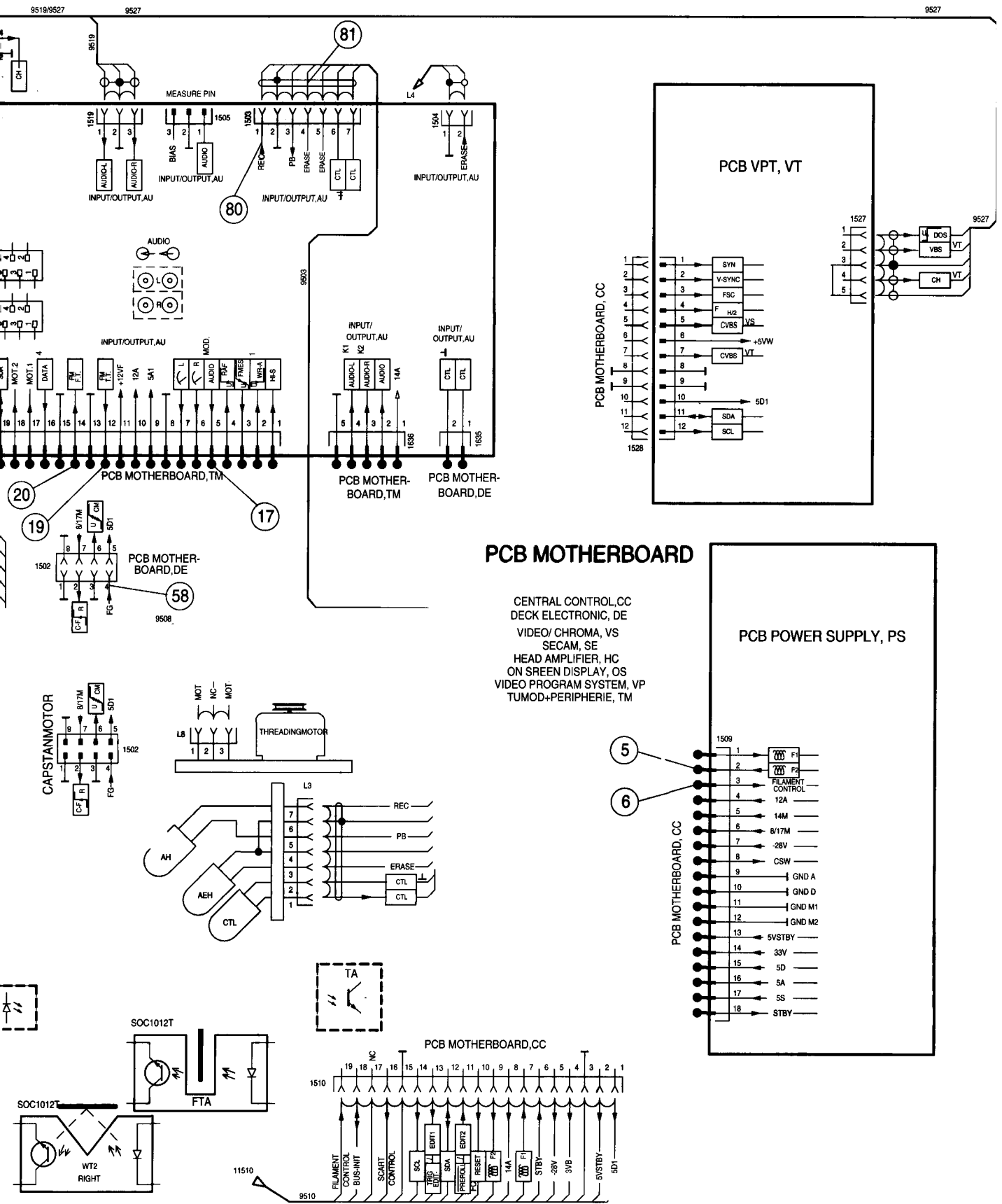
PCB MOTHERBOARD
CENTRAL CONTROL,CC
DECK ELECTRONIC, DE
VIDEO/ CHROMA, VS
SECAM, SE
HEAD AMPLIFIER, HC
ON SREEN DISPLAY, OS
VIDEO PROGRAM SYSTEM, VP
TUMOD+PERIPHERIE, TM
PCB VPT, VT
PCB POWER SUPPLY, PS
PCB MOTHERBOARD, CC
PCB MOTHERBOARD,TM
PCB MOTHER-BOARD,TM
PCB MOTHER-BOARD,DE
PCB MOTHER-BOARD,DE
CAPSTANMOTOR
THREADINGMOTOR
SOC1012T
FTA
WT2 RIGHT
TA
PCB MOTHERBOARD,CC
INPUT/OUTPUT,AU
AUDIO
MEASURE PIN
9519/9527
9527
9503
9508
9510
11510
1509
1510
1527
1528
1502
1505
1503
1504
1519
1636
1635
81
80
20
19
17
58
5
6

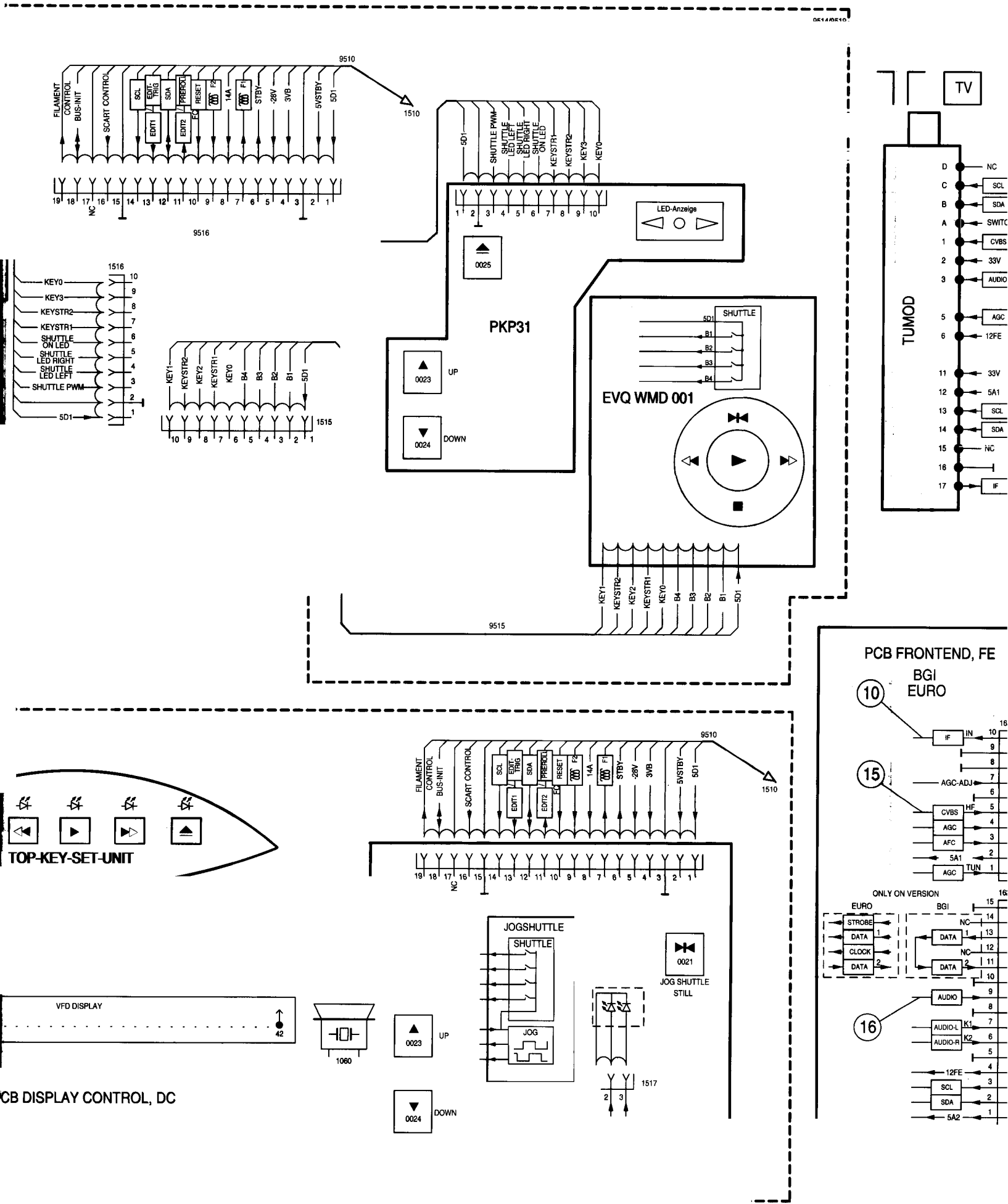
9510
1510
FILAMENT
CONTROL
BUS-INIT
SCART CONTROL
SCL
EDIT TRIG
SDA
PREROLL
RESET
F2
14A
F1
STBY
-28V
3VB
5VSTBY
5D1
EDIT1
EDIT2
EQ
NC
9516
1516
KEY0
KEY3
KEYSTR2
KEYSTR1
SHUTTLE ON LED
SHUTTLE LED RIGHT
SHUTTLE LED LEFT
SHUTTLE PWM
5D1
KEY1
KEYSTR2
KEY2
KEYSTR1
KEY0
B4
B3
B2
B1
5D1
1515
SHUTTLE PWM
SHUTTLE LED LEFT
SHUTTLE LED RIGHT
SHUTTLE ON LED
KEYSTR1
KEYSTR2
KEY3
KEY0
LED-Anzeige
0025
PKP31
0023
UP
0024
DOWN
SHUTTLE
B1
B2
B3
B4
EVQ WMD 001
9515
TV
TUMOD
NC
SCL
SDA
SWITC
CVBS
33V
AUDIO
AGC
12FE
33V
5A1
SCL
SDA
NC
IF
TOP-KEY-SET-UNIT
VFD DISPLAY
42
1060
0023
UP
0024
DOWN
JOGSHUTTLE
SHUTTLE
JOG
0021
JOG SHUTTLE STILL
1517
PCB DISPLAY CONTROL, DC
PCB FRONTEND, FE
BGI
EURO
10
15
16
IF
IN
AGC-ADJ
CVBS
HF
AGC
AFC
5A1
AGC
TUN
ONLY ON VERSION
EURO
BGI
STROBE
DATA
CLOCK
DATA
NC
DATA
NC
DATA
AUDIO
AUDIO-L
AUDIO-R
K1
K2
12FE
SCL
SDA
5A2

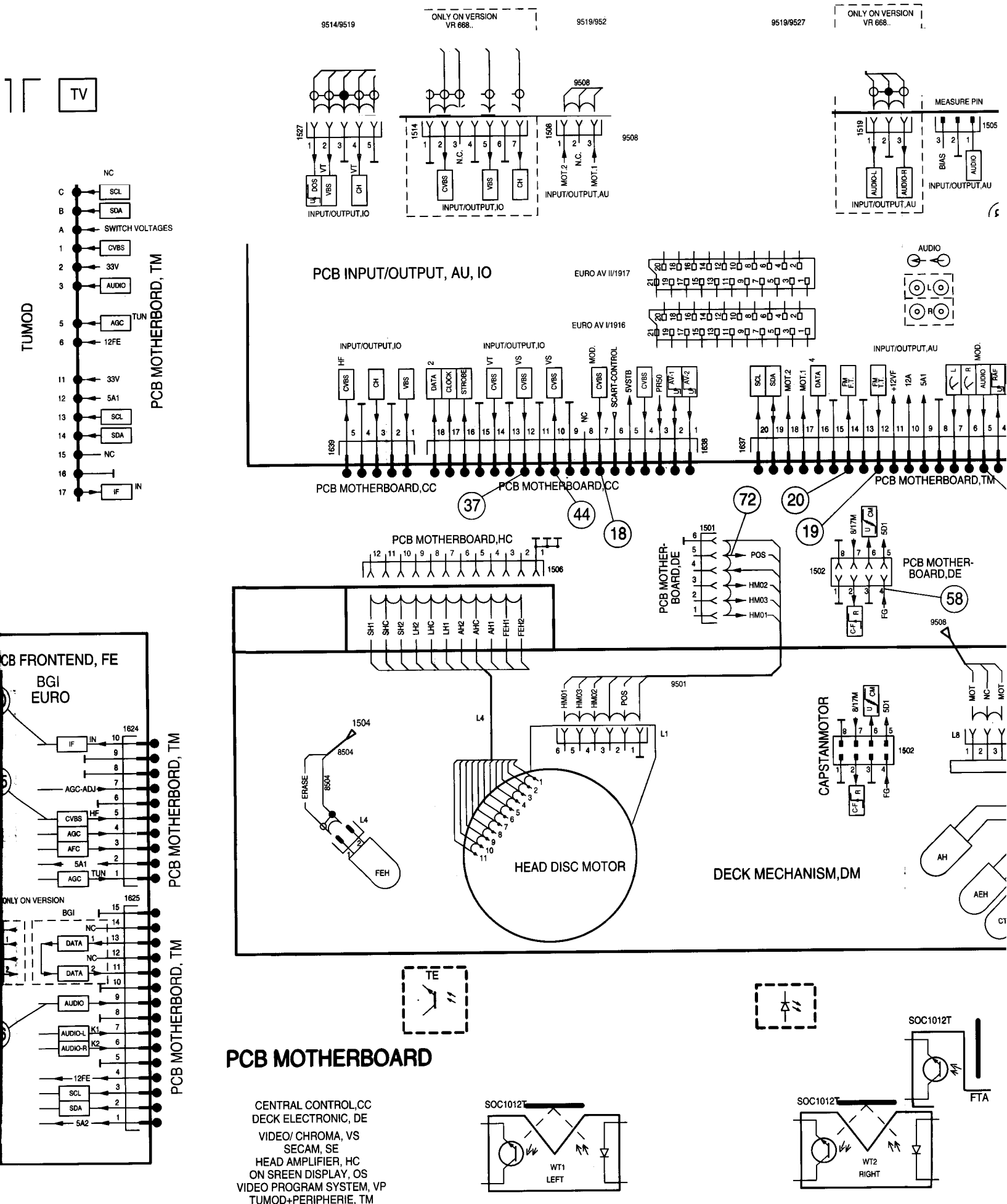

PCB MOTHERBOARD

CENTRAL CONTROL,CC
DECK ELECTRONIC, DE
VIDEO/ CHROMA, VS
SECAM, SE
HEAD AMPLIFIER, HC
ON SREEN DISPLAY, OS
VIDEO PROGRAM SYSTEM, VP
TUMOD+PERIPHERIE, TM

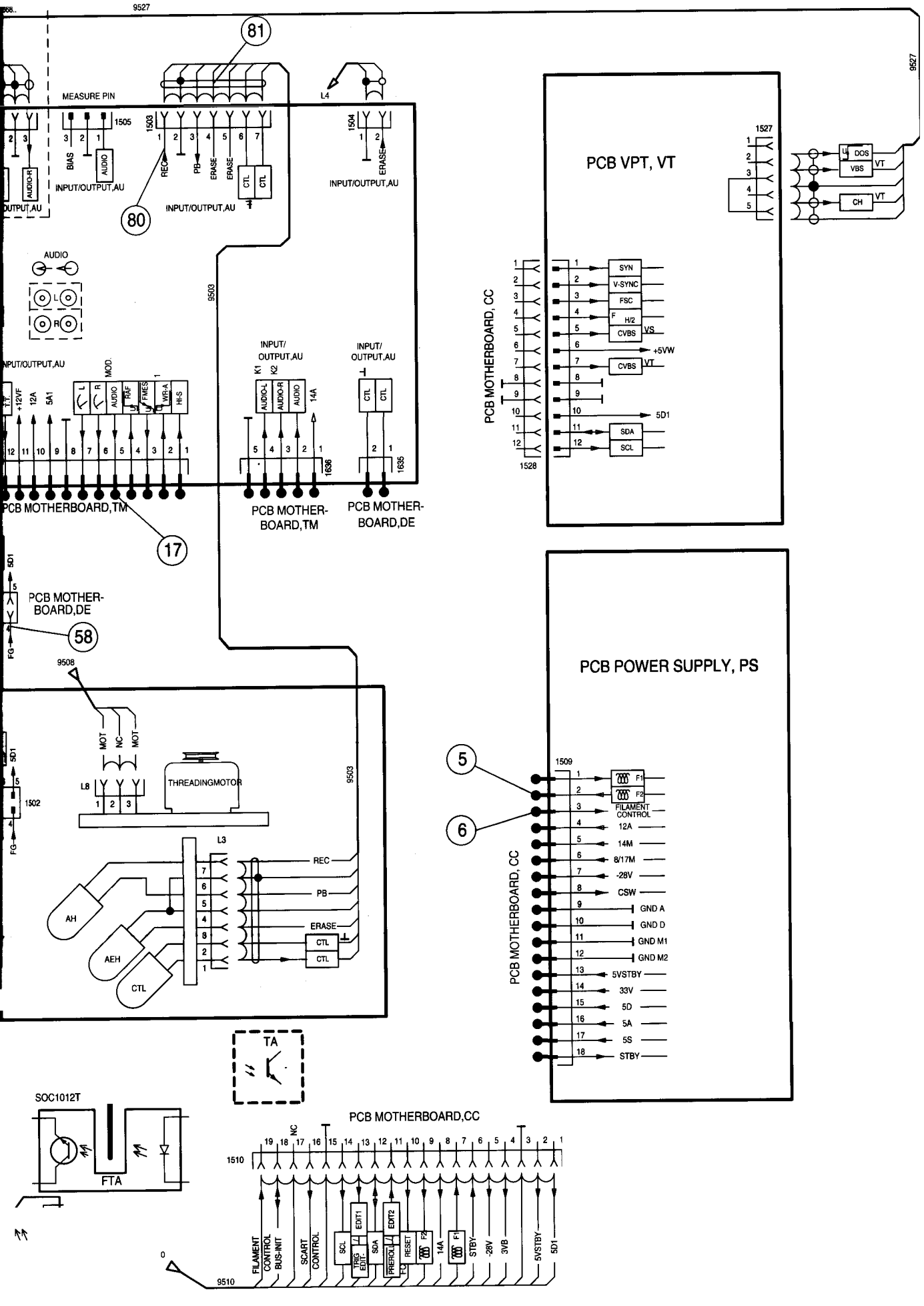
9527
81
MEASURE PIN
L4
1505
1503
1504
BIAS
AUDIO
REC
PB
ERASE
CTL
INPUT/OUTPUT,AU
80
AUDIO-R
AUDIO
9503
INPUT/
OUTPUT,AU
K1
K2
AUDIO-L
AUDIO-R
14A
1636
1635
MOD.
+12VF
12A
5A1
WR-A
HI-S
PCB MOTHERBOARD,TM
17
PCB MOTHER-
BOARD,TM
PCB MOTHER-
BOARD,DE
5D1
58
9508
MOT
NC
L8
THREADINGMOTOR
1502
L3
AH
AEH
CTL
PCB VPT, VT
1527
DOS
VBS
CH
VT
PCB MOTHERBOARD, CC
1528
SYN
V-SYNC
FSC
H/2
CVBS
VS
+5VW
SDA
SCL
PCB POWER SUPPLY, PS
1509
F1
F2
FILAMENT
CONTROL
12A
14M
8/17M
-28V
CSW
GND A
GND D
GND M1
GND M2
5VSTBY
33V
5D
5A
5S
STBY
5
6
TA
SOC1012T
FTA
PCB MOTHERBOARD,CC
1510
NC
FILAMENT
CONTROL
BUS-INIT
SCART
CONTROL
EDIT1
EDIT2
RESET
F2
F1
3VB
9510

Wiring Diagram VR967

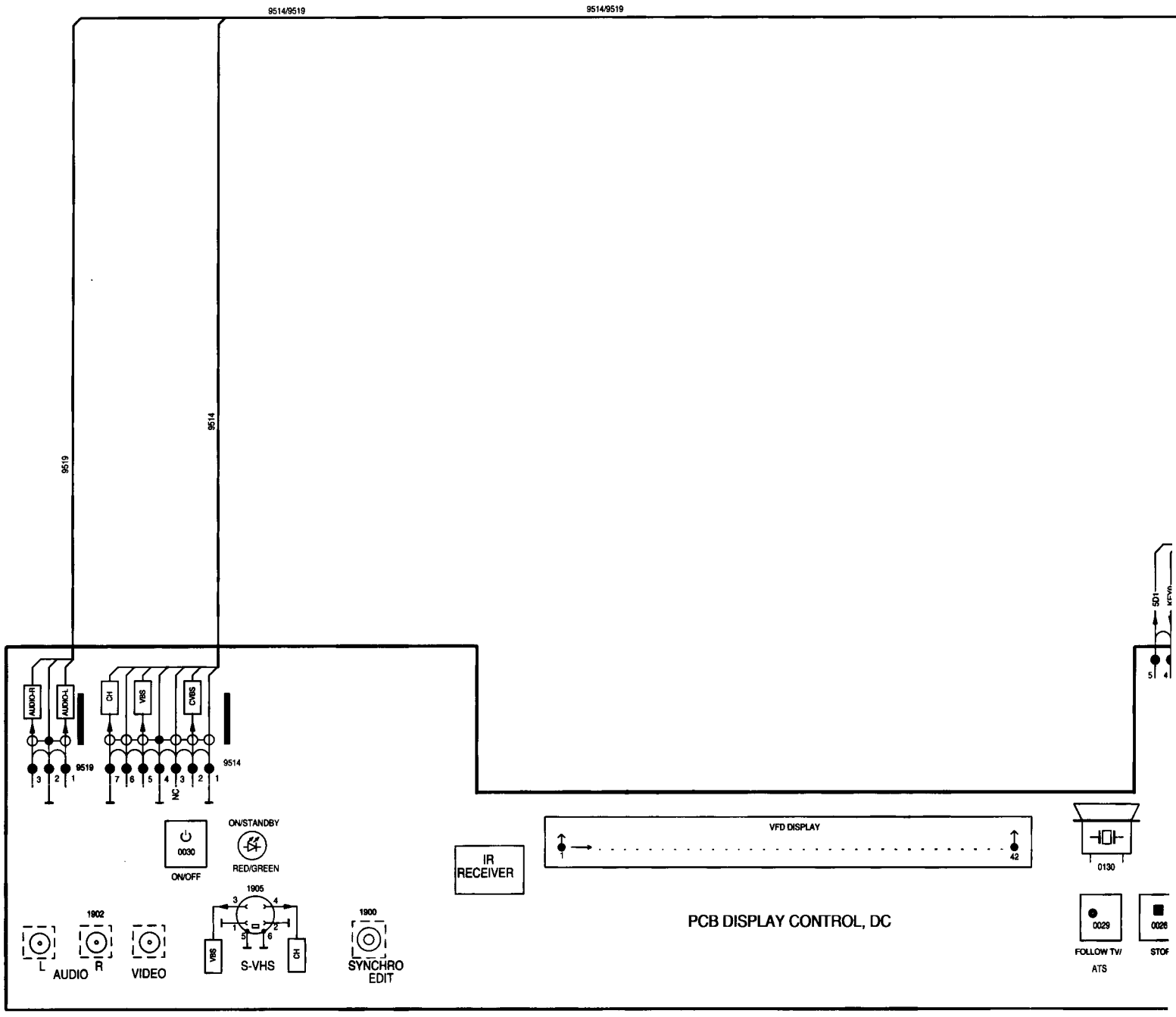

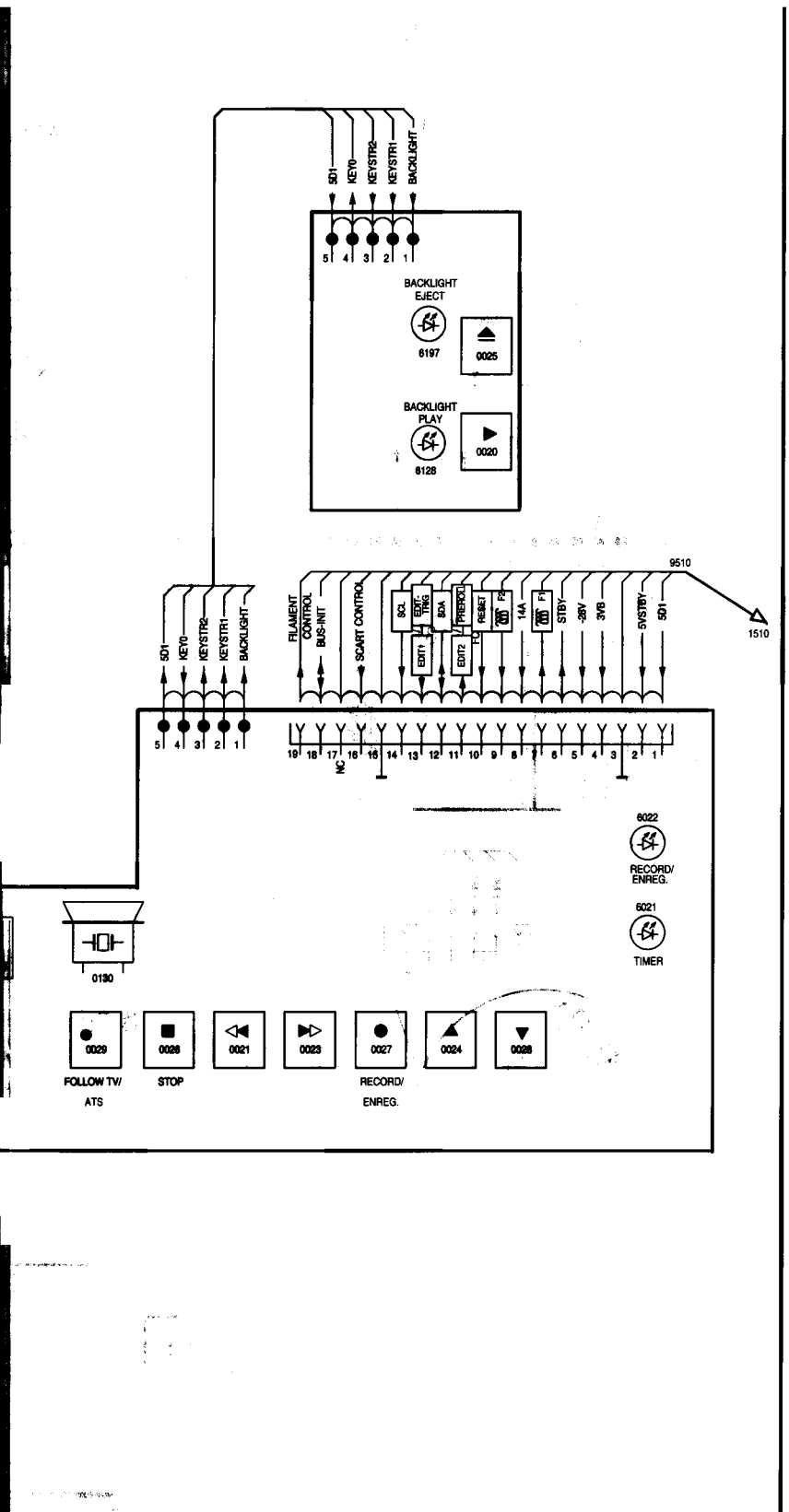
SDI
KEY0
KEYSTR2
KEYSTR1
BACKLIGHT
BACKLIGHT EJECT
6197
0025
BACKLIGHT PLAY
6128
0020
9510
1510
FILAMENT CONTROL
BUS-INIT
SCART CONTROL
SCL
EXT. TRIG.
SDA
PHEROO
RESET
EDIT1
EDIT2
14A
STBY
-26V
3V8
5VSTBY
NC
6022
RECORD/ ENREG.
6021
TIMER
0130
0029
FOLLOW TV/ ATS
0026
STOP
0021
0023
0027
RECORD/ ENREG.
0024
0028

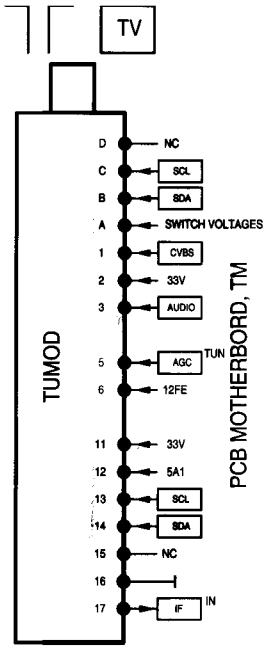
TV
TUMOD
D NC
C SCL
B SDA
A SWITCH VOLTAGES
1 CVBS
2 33V
3 AUDIO
5 AGC TUN
6 12FE
11 33V
12 5A1
13 SCL
14 SDA
15 NC
16
17 IF IN
PCB MOTHERBORD, TM

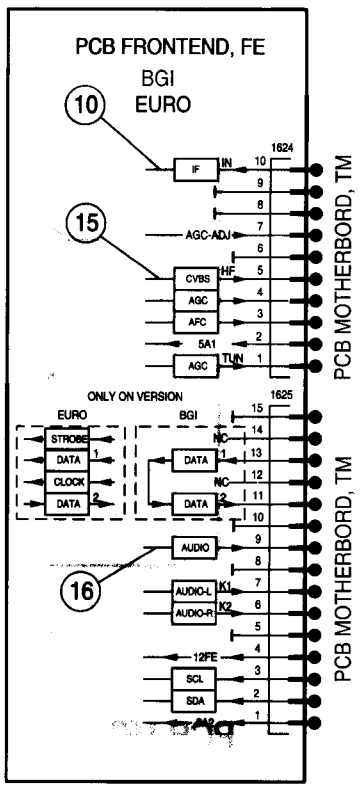
PCB FRONTEND, FE
BGI
EURO
10
IF IN
1624
15
AGC-ADJ
CVBS HF
AGC
AFC
5A1
AGC TUN
ONLY ON VERSION
EURO
BGI
1625
STROBE
DATA 1
CLOCK
DATA 2
NC
DATA 1
NC
DATA 2
16
AUDIO
AUDIO-L K1
AUDIO-R K2
12FE
SCL
SDA
PCB MOTHERBORD, TM

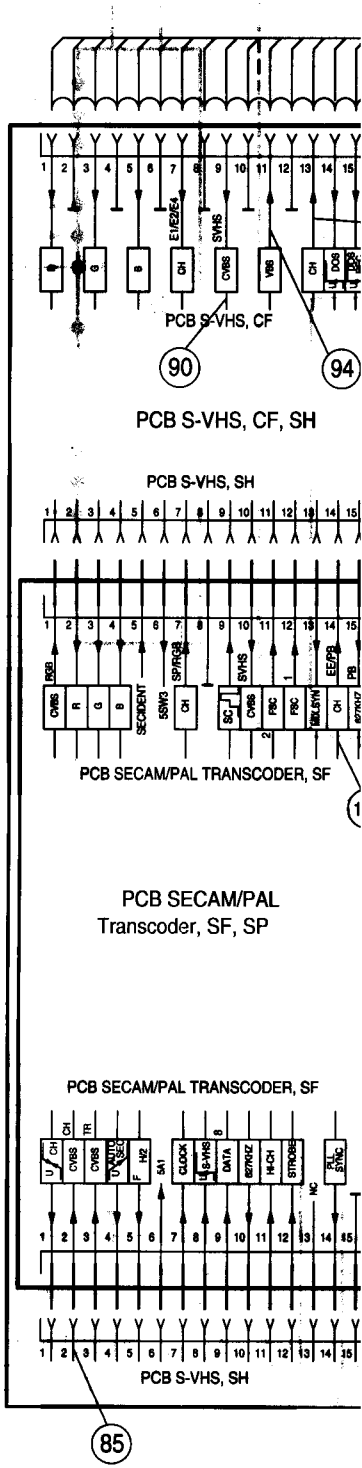
PCB S-VHS, CF
90
94
PCB S-VHS, CF, SH
PCB S-VHS, SH
PCB SECAM/PAL TRANSCODER, SF
PCB SECAM/PAL
Transcoder, SF, SP
PCB SECAM/PAL TRANSCODER, SF
PCB S-VHS, SH
85

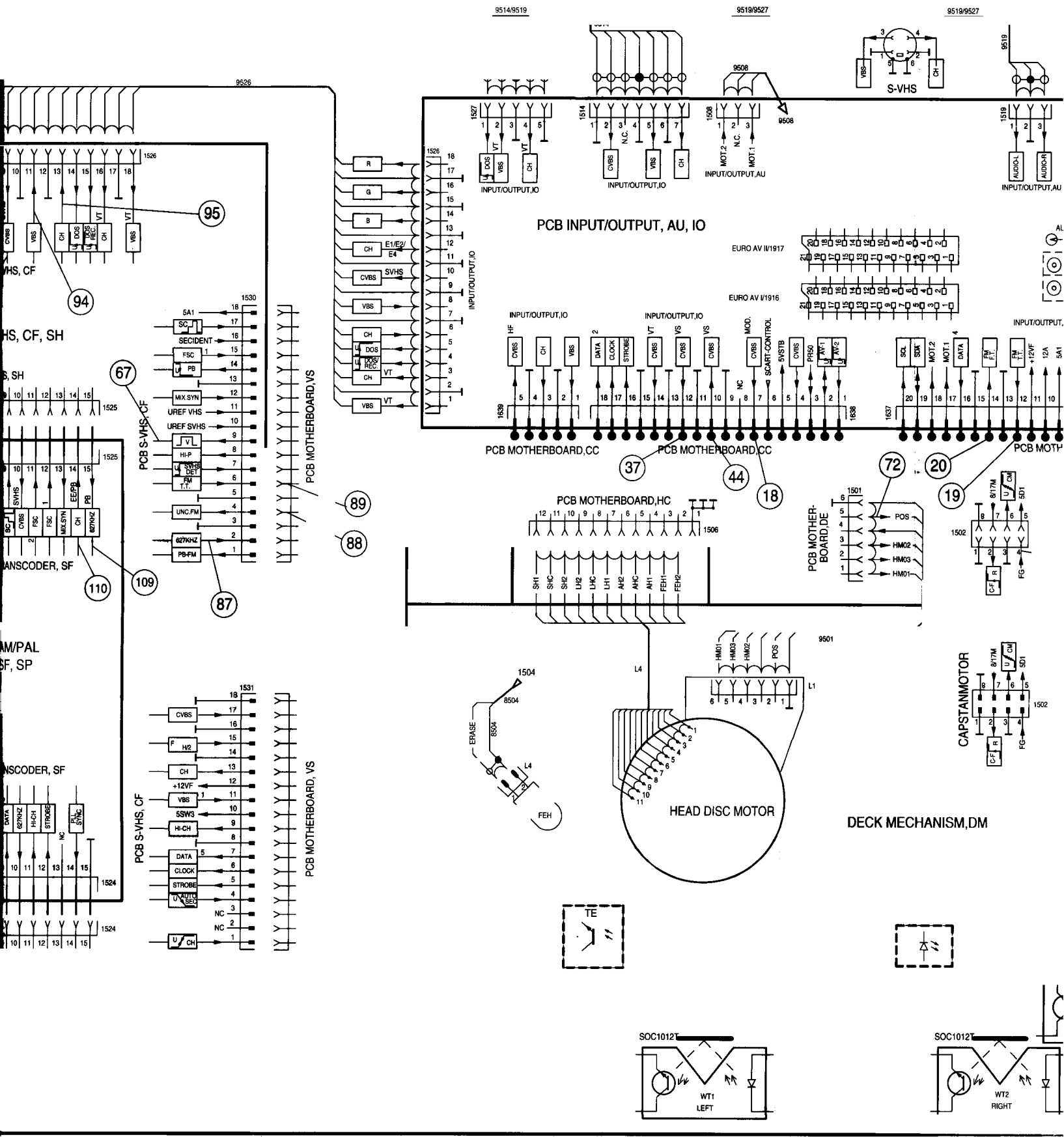

9514/9519
9519/9527
9519/9527
S-VHS
PCB INPUT/OUTPUT, AU, IO
INPUT/OUTPUT,IO
INPUT/OUTPUT,AU
EURO AV II/1917
EURO AV I/1916
PCB MOTHERBOARD,CC
PCB MOTHERBOARD,HC
PCB MOTHER-BOARD,DE
PCB MOTHERBOARD,VS
PCB S-VHS, CF
HS, CF, SH
ANSCODER, SF
AM/PAL
SF, SP
HEAD DISC MOTOR
DECK MECHANISM,DM
CAPSTANMOTOR
ERASE
FEH
TE
SOC1012T
WT1
LEFT
WT2
RIGHT

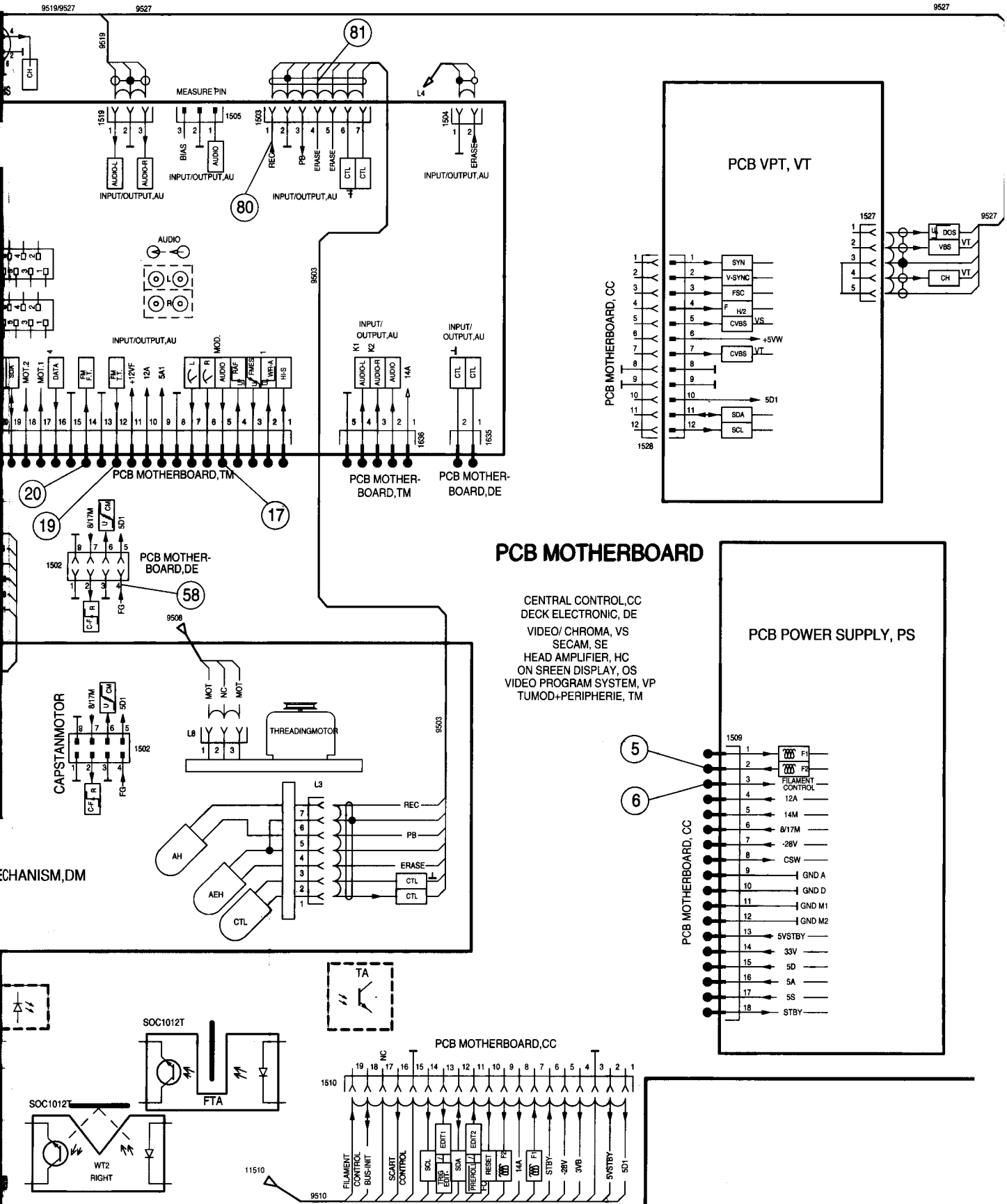
9519/9527
9527
9527
9619
81
MEASURE PIN
L4
1519
1505
1503
1504
AUDIO-L
AUDIO-R
BIAS
AUDIO
REC
PB
ERASE
ERASE
CTL
CTL
ERASE
INPUT/OUTPUT,AU
INPUT/OUTPUT,AU
INPUT/OUTPUT,AU
INPUT/OUTPUT,AU
80
AUDIO
L
R
9503
INPUT/OUTPUT,AU
MOD.
SDX
MOT.2
MOT.1
DATA
FM T.T.
FM T.T.
+12VF
12A
5A1
AUDIO
ABF
FINES
WR-A
HI-S
INPUT/ OUTPUT,AU
K1
K2
AUDIO-L
AUDIO-R
AUDIO
14A
INPUT/ OUTPUT,AU
CTL
CTL
1636
1635
PCB MOTHERBOARD,TM
PCB MOTHER- BOARD,TM
PCB MOTHER- BOARD,DE
20
19
17
8/17M
CM
5D1
1502
PCB MOTHER- BOARD,DE
58
C-F
R
FG
9508
MOT
NC
MOT
L8
THREADINGMOTOR
9503
CAPSTANMOTOR
8/17M
CM
5D1
1502
C-F
R
FG
L3
REC
PB
ERASE
CTL
CTL
AH
AEH
CTL
ECHANISM,DM
TA
SOC1012T
FTA
SOC1012T
WT2
RIGHT
PCB MOTHERBOARD,CC
1510
NC
FILAMENT CONTROL
BUS-INIT
SCART CONTROL
SCL
EDIT1
EDIT2
SDA
PRERD
RESET
F2
14A
F1
STBY
-28V
3VB
5VSTBY
5D1
11510
9510
PCB VPT, VT
PCB MOTHERBOARD, CC
SYN
V-SYNC
FSC
H/2
CVBS
VS
+5VW
CVBS
VT
5D1
SDA
SCL
1528
1527
9527
DOS
VBS
VT
CH
VT
PCB MOTHERBOARD
CENTRAL CONTROL,CC
DECK ELECTRONIC, DE
VIDEO/ CHROMA, VS
SECAM, SE
HEAD AMPLIFIER, HC
ON SREEN DISPLAY, OS
VIDEO PROGRAM SYSTEM, VP
TUMOD+PERIPHERIE, TM
PCB POWER SUPPLY, PS
5
6
1509
F1
F2
FILAMENT CONTROL
12A
14M
8/17M
-28V
CSW
GND A
GND D
GND M1
GND M2
5VSTBY
33V
5D
5A
5S
STBY
PCB MOTHERBOARD, CC

Wiring Diagram VR969

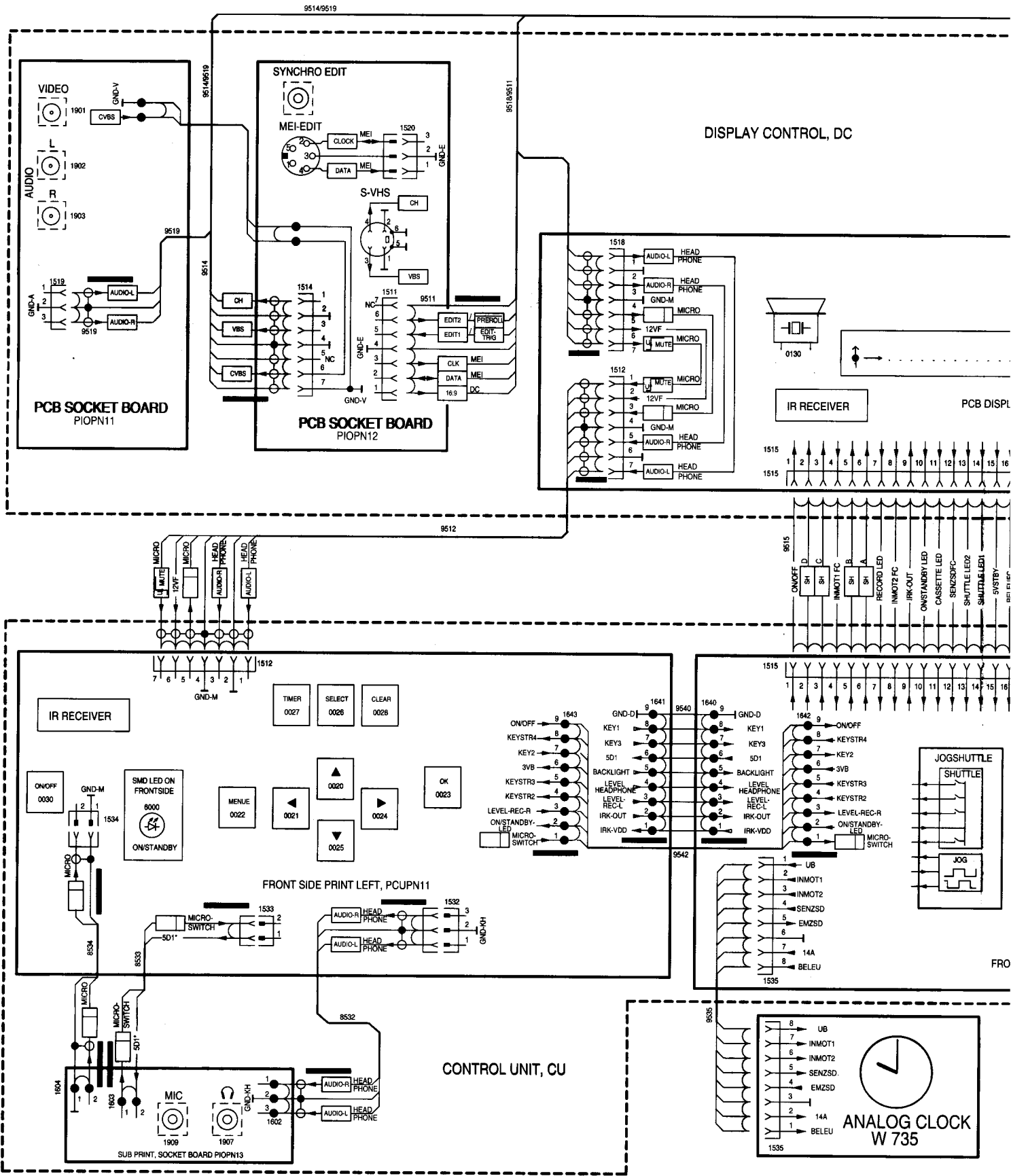

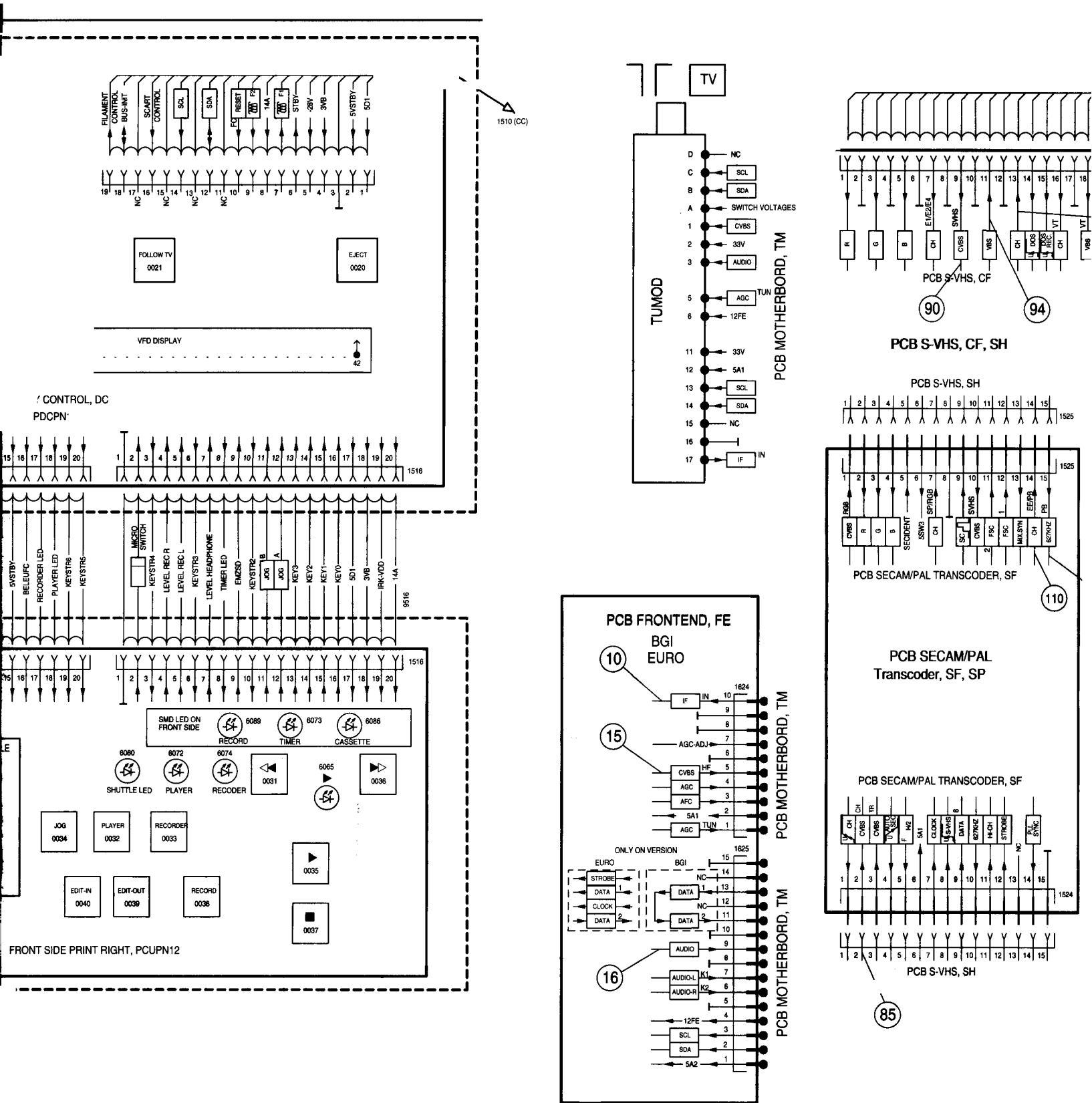
FILAMENT CONTROL
BUS-INT
SCART CONTROL
SCL
SDA
RESET
14A
STBY
-28V
3VB
5VSTBY
5D1
1510 (CC)
NC
FOLLOW TV 0021
EJECT 0020
VFD DISPLAY
42
CONTROL, DC
PDCPN
1516
5VSTBY
BELEUFC
RECORDER LED
PLAYER LED
KEYSTR6
KEYSTR5
MICRO SWITCH
KEYSTR4
LEVEL REC R
LEVEL REC L
KEYSTR3
LEVEL HEADPHONE
TIMER LED
EM2SD
KEYSTR2
JOG B
JOG A
KEY3
KEY2
KEY1
KEY0
5D1
3VB
IRK-VDD
14A
9516
SMD LED ON FRONT SIDE
6089 RECORD
6073 TIMER
6086 CASSETTE
6080 SHUTTLE LED
6072 PLAYER
6074 RECODER
0031
6065
0036
JOG 0034
PLAYER 0032
RECORDER 0033
0035
EDIT-IN 0040
EDIT-OUT 0039
RECORD 0038
0037
FRONT SIDE PRINT RIGHT, PCUPN12
TV
TUMOD
PCB MOTHERBORD, TM
D NC
C SCL
B SDA
A SWITCH VOLTAGES
1 CVBS
2 33V
3 AUDIO
5 AGC TUN
6 12FE
11 33V
12 5A1
13 SCL
14 SDA
15 NC
16
17 IF IN
PCB S-VHS, CF
90
94
PCB S-VHS, CF, SH
PCB S-VHS, SH
1525
PCB SECAM/PAL TRANSCODER, SF
110
PCB SECAM/PAL Transcoder, SF, SP
PCB SECAM/PAL TRANSCODER, SF
1524
PCB S-VHS, SH
85
PCB FRONTEND, FE
BGI
EURO
10
IF IN
15
AGC-ADJ
CVBS HF
AGC
AFC
5A1
AGC TUN
1624
ONLY ON VERSION
EURO
BGI
STROBE
DATA
CLOCK
DATA
1625
NC
DATA
NC
DATA
16
AUDIO
AUDIO-L K1
AUDIO-R K2
12FE
SCL
SDA
5A2
PCB MOTHERBORD, TM

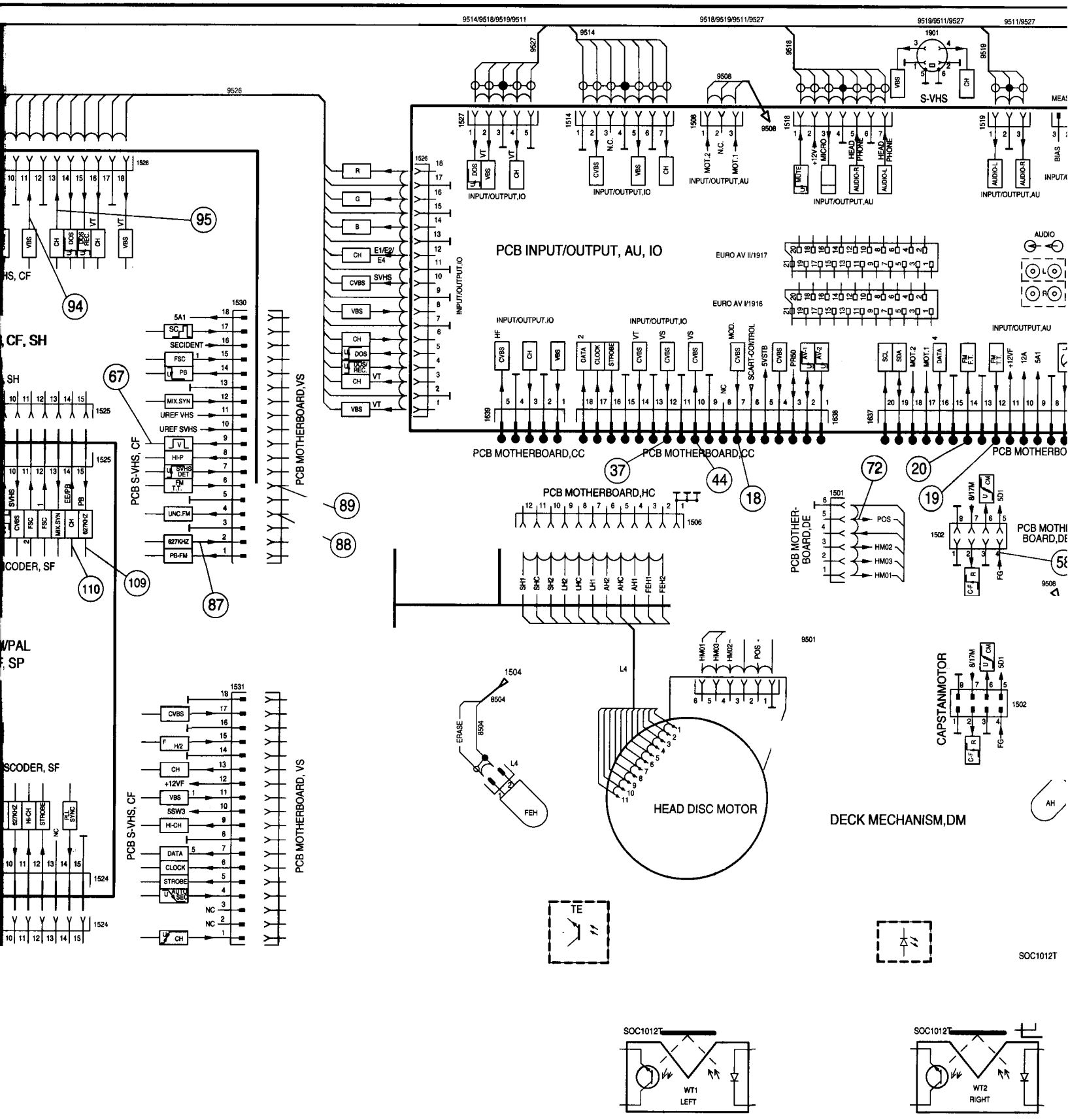
PCB INPUT/OUTPUT, AU, IO
PCB MOTHERBOARD,CC
PCB MOTHERBOARD,HC
PCB MOTHERBOARD,VS
PCB S-VHS, CF
PCB MOTHERBOARD,DE
CAPSTANMOTOR
HEAD DISC MOTOR
DECK MECHANISM,DM
INPUT/OUTPUT,IO
INPUT/OUTPUT,AU
S-VHS
EURO AV II/1917
EURO AV I/1916
SOC1012T
WT1 LEFT
WT2 RIGHT

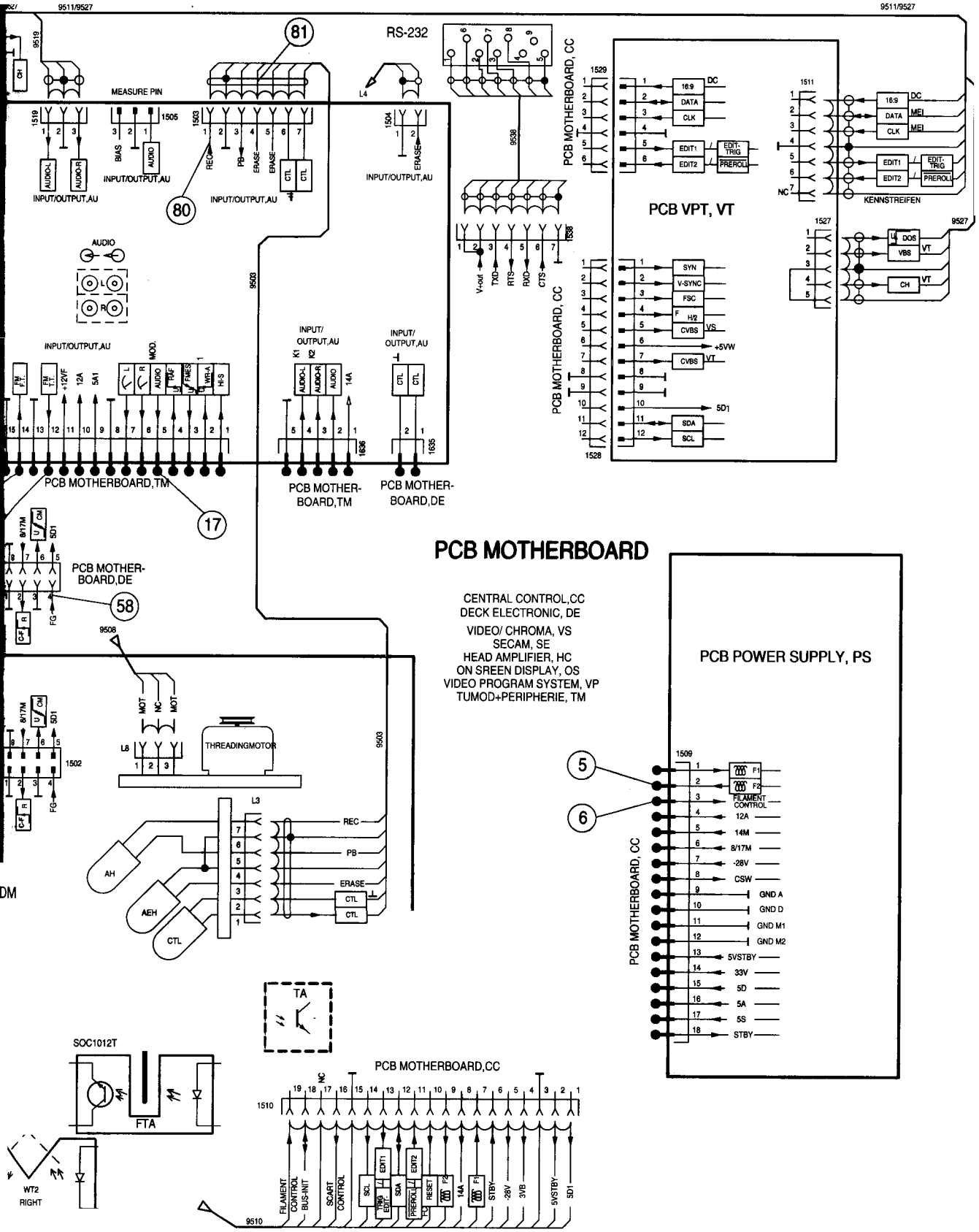
9511/9527
9511/9527
81
RS-232
MEASURE PIN
INPUT/OUTPUT,AU
80
PCB MOTHERBOARD, CC
PCB VPT, VT
KENNSTREIFEN
PCB MOTHERBOARD, CC
PCB MOTHERBOARD,TM
PCB MOTHER-BOARD,TM
PCB MOTHER-BOARD,DE
17
PCB MOTHER-BOARD,DE
58
PCB MOTHERBOARD
CENTRAL CONTROL,CC
DECK ELECTRONIC, DE
VIDEO/ CHROMA, VS
SECAM, SE
HEAD AMPLIFIER, HC
ON SREEN DISPLAY, OS
VIDEO PROGRAM SYSTEM, VP
TUMOD+PERIPHERIE, TM
PCB POWER SUPPLY, PS
THREADINGMOTOR
REC
PB
ERASE
AH
AEH
CTL
PCB MOTHERBOARD, CC
SOC1012T
FTA
WT2
RIGHT
TA
PCB MOTHERBOARD,CC

Block Diagram Analog S-VHS

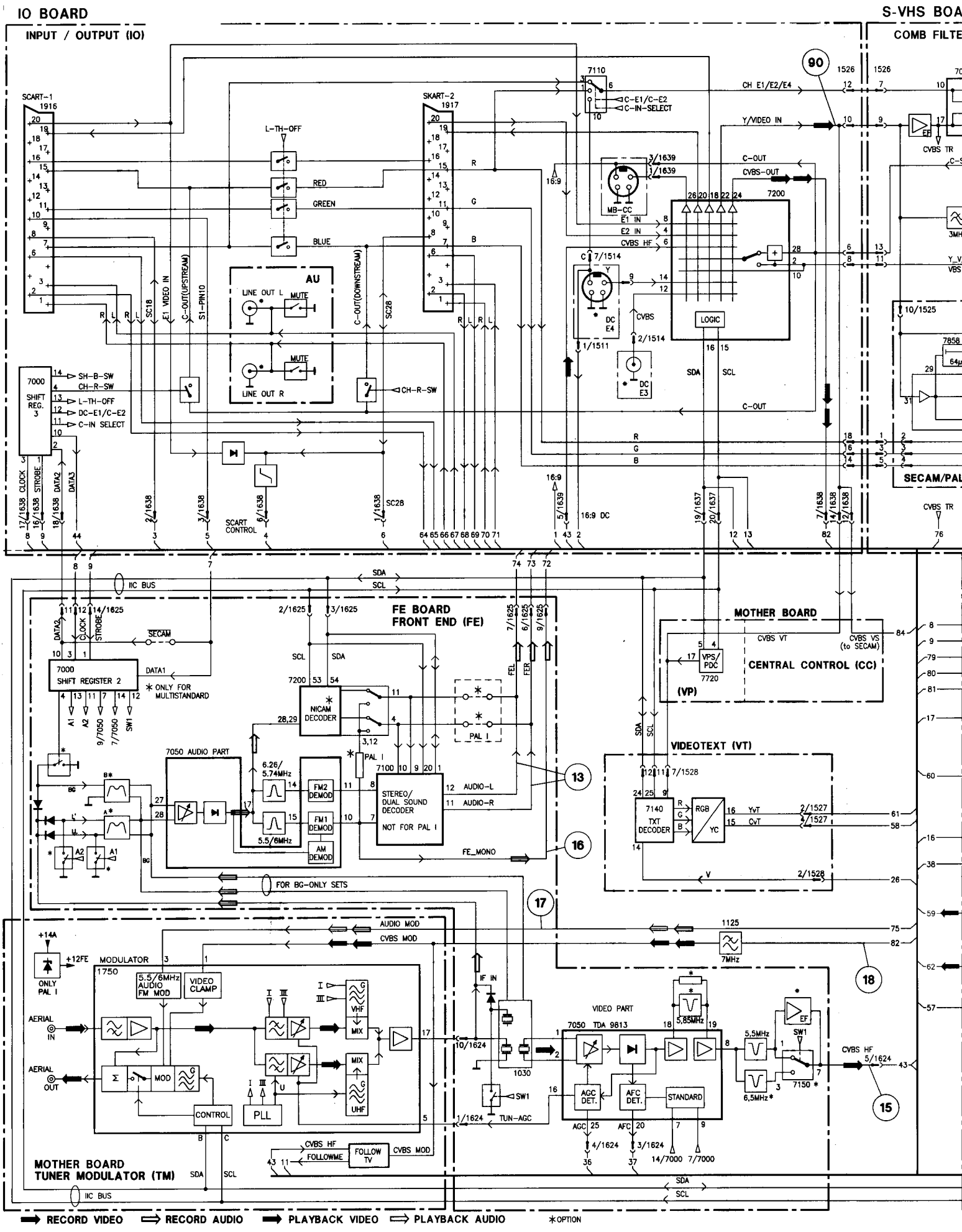

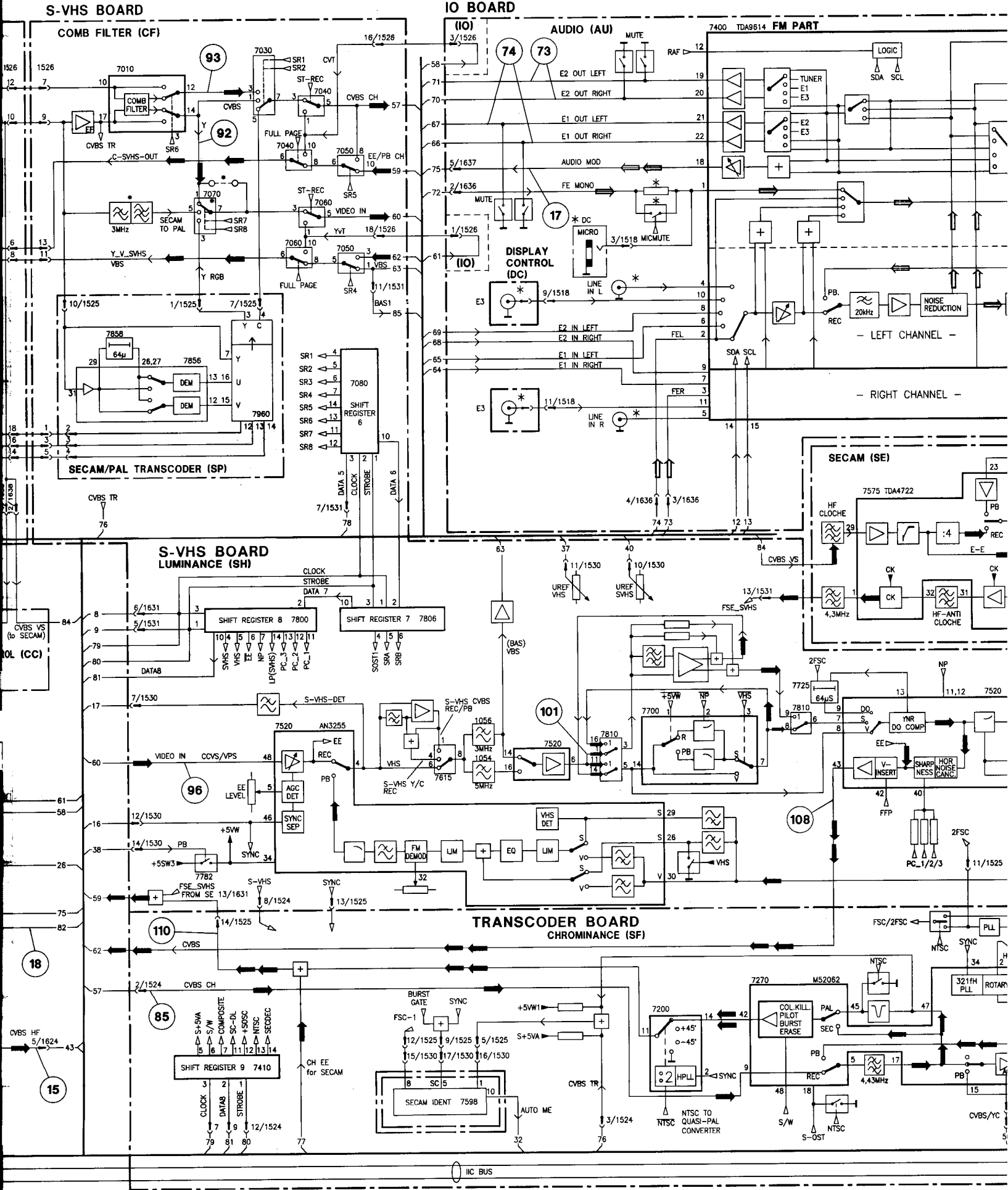
S-VHS BOARD
COMB FILTER (CF)
IO BOARD
(IO)
AUDIO (AU)
7400 TDA9614 FM PART
SECAM/PAL TRANSCODER (SP)
DISPLAY CONTROL (DC)
- LEFT CHANNEL -
- RIGHT CHANNEL -
SECAM (SE)
S-VHS BOARD
LUMINANCE (SH)
TRANSCODER BOARD
CHROMINANCE (SF)
SHIFT REGISTER 8 7800
SHIFT REGISTER 7 7806
SHIFT REGISTER 9 7410
SECAM IDENT 7598
NTSC TO QUASI-PAL CONVERTER
IIC BUS

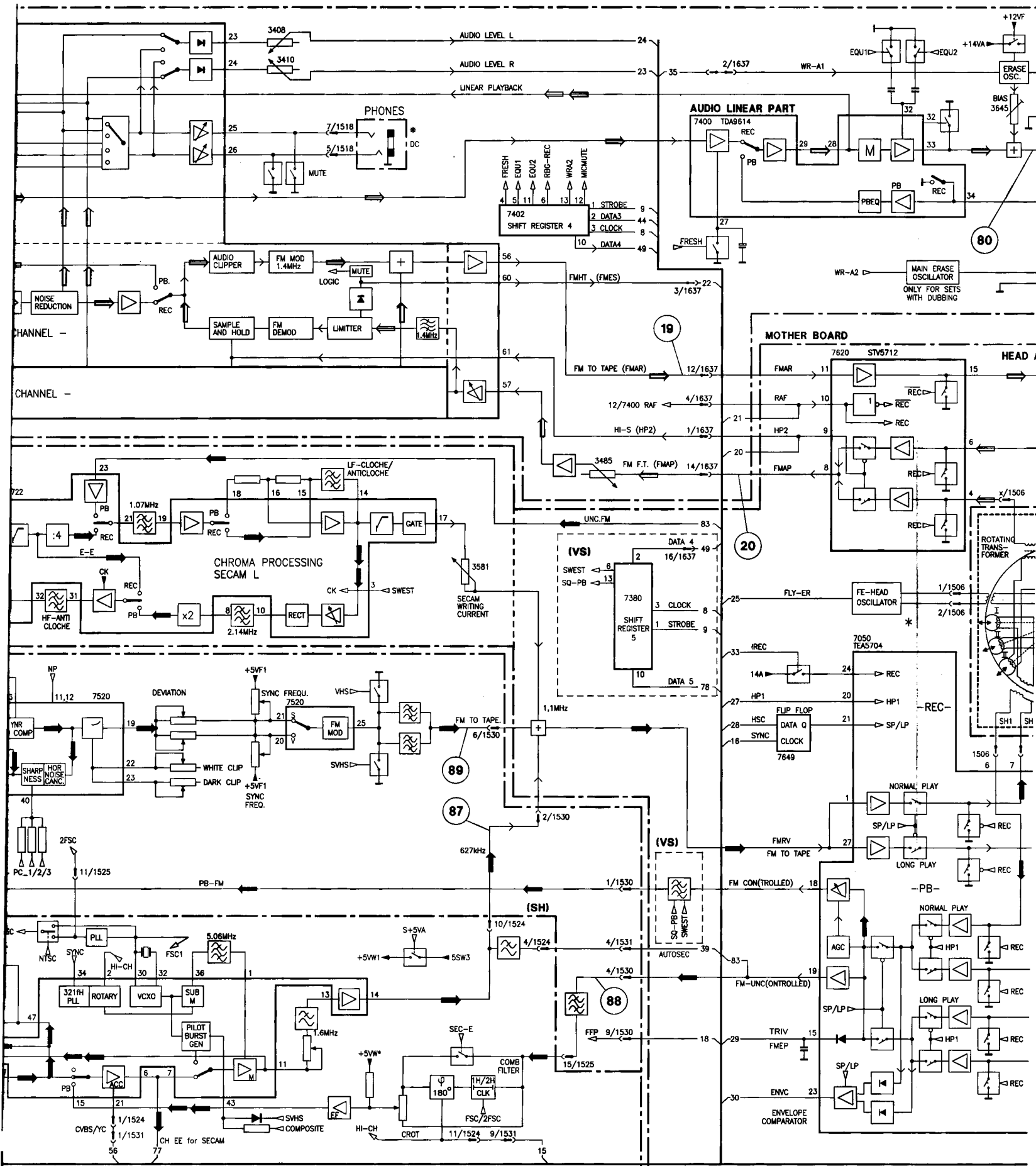
AUDIO LEVEL L
AUDIO LEVEL R
LINEAR PLAYBACK
PHONES
MUTE
AUDIO LINEAR PART
7400 TDA9614
ERASE OSC.
BIAS 3645
7402 SHIFT REGISTER 4
STROBE
DATA3
CLOCK
DATA4
FRESH
EQU1
EQU2
RBG-REC
WRA2
MICMUTE
AUDIO CLIPPER
FM MOD 1.4MHz
LOGIC
NOISE REDUCTION
SAMPLE AND HOLD
FM DEMOD
LIMITER
CHANNEL -
FMHT (FMES)
MAIN ERASE OSCILLATOR
ONLY FOR SETS WITH DUBBING
MOTHER BOARD
7620 STV5712
HEAD
FM TO TAPE (FMAR)
12/7400 RAF
HI-S (HP2)
FM F.T. (FMAP)
LF-CLOCHE/ ANTICLOCHE
1.07MHz
GATE
CHROMA PROCESSING SECAM L
HF-ANTI CLOCHE
2.14MHz
RECT
SECAM WRITING CURRENT
UNC.FM
(VS)
7380 SHIFT REGISTER 5
SWEST
SQ-PB
FLY-ER
FE-HEAD OSCILLATOR
ROTATING TRANS-FORMER
7050 TEA5704
FLIP FLOP
DATA Q
CLOCK
7649
DEVIATION
SYNC FREQU.
FM MOD
WHITE CLIP
DARK CLIP
SHARP NESS
HOR NOISE CANC.
FM TO TAPE.
1,1MHz
NORMAL PLAY
LONG PLAY
FMRV
FM TO TAPE
PB-FM
(SH)
AUTOSEC
FM CON(TROLLED)
FM-UNC(ONTROLLED)
PLL
5.06MHz
321fH PLL
ROTARY
VCXO
SUB M
PILOT BURST GEN
1.6MHz
SEC-E
COMB FILTER
FSC/2FSC
CROT
CVBS/YC
CH EE for SECAM
SVHS
COMPOSITE
TRIV
FMEP
ENVC
ENVELOPE COMPARATOR
IIC BUS

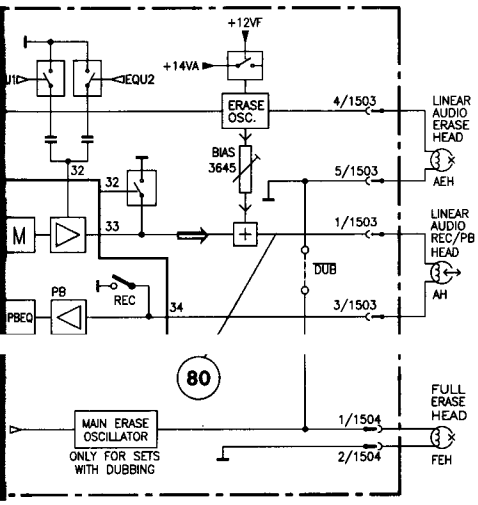

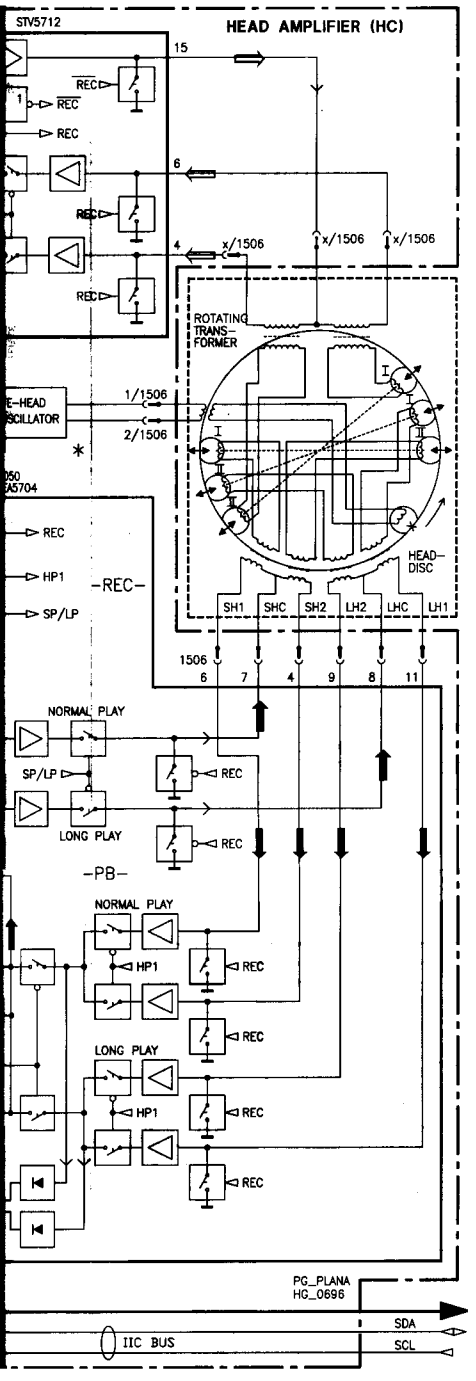

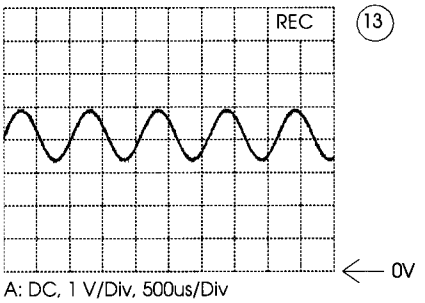

A: DC, 1 V/Div, 500us/Div
IC 7100 Pin 11/12

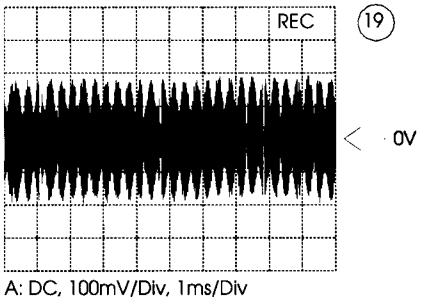

A: DC, 100mV/Div, 1ms/Div
Connector 1637 Pin 12

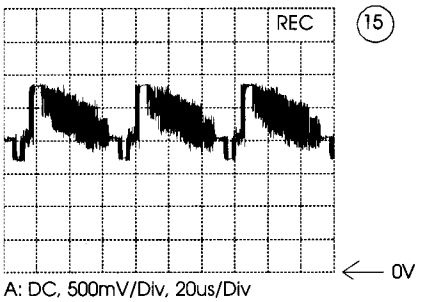

A: DC, 500mV/Div, 20us/Div
Connector 1624 Pin 5

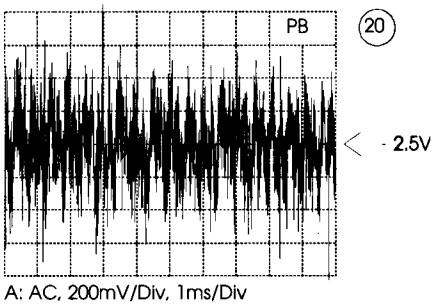

A: AC, 200mV/Div, 1ms/Div
Connector 1637 Pin 14

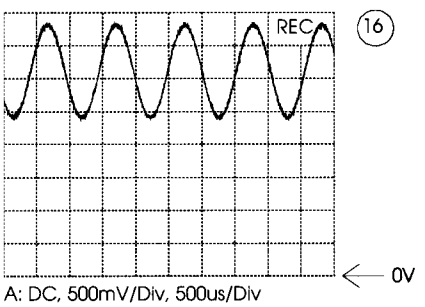

A: DC, 500mV/Div, 500us/Div
Connector 1625 Pin 9

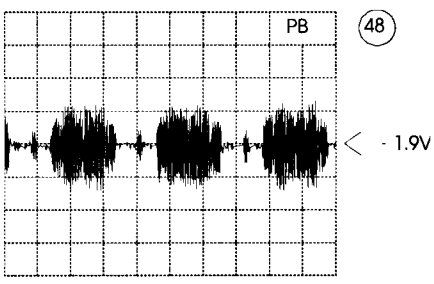

A: AC, 200mV/Div, 20us/Div
IC 7320 Pin 23

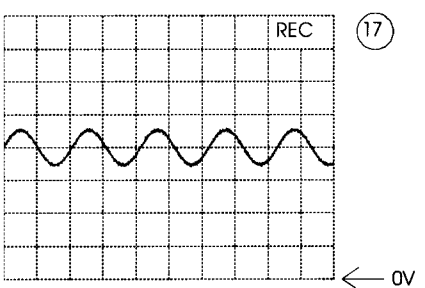

A: DC, 1 V/Div, 500us/Div
Connector 1637 Pin 5

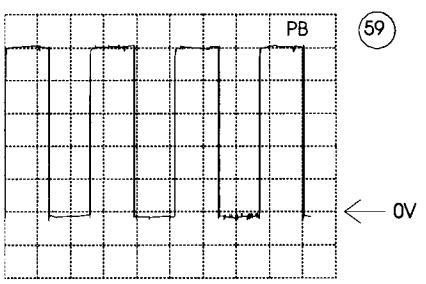

A: DC, 1 V/Div, 10us/Div
IC 7085 Pin 25

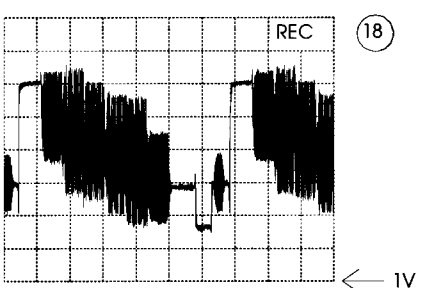

A: DC, 500mV/Div, 10us/Div
Connector 1638 Pin 7

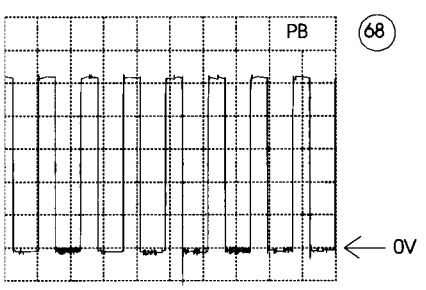

A: DC, 1 V/Div, 20us/Div
IC 7085 Pin 24

Interconnections:

PS page 3-27	SE page 3-35	DE page 3-38	VP page 3-41	VT page 3-46	SF page 3-53
FE page 3-29/31	HC page 3-36	OS page 3-39	IO page 3-44	CF page 3-50	SP page 3-54
TM page 3-34	VS page 3-37	CC page 3-40	AU page 3-45	SH page 3-51	DC page 3-57...

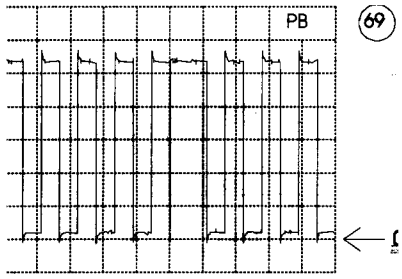

A: DC, 1 V/Div, 2ms/Div
IC 7085 Pin 12

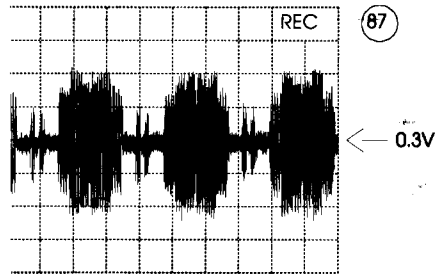

A: AC, 50mV/Div, 20us/Div
Connector 1530 Pin 2

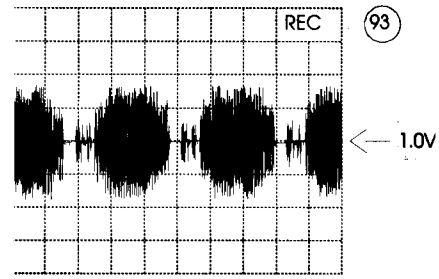

A: AC, 200mV/Div, 20us/Div
IC 7010 Pin 12

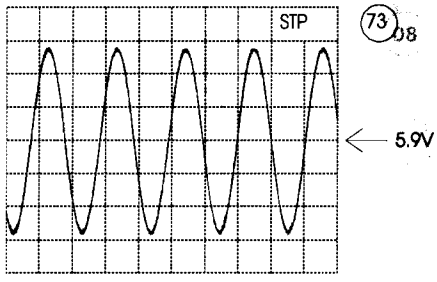

A: AC, 200mV/Div, 500us/Div
IC 7400 Pin 19/20

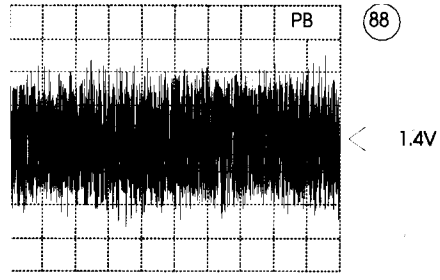

A: AC, 100mV/Div, 10us/Div
Connector 1530 Pin 4

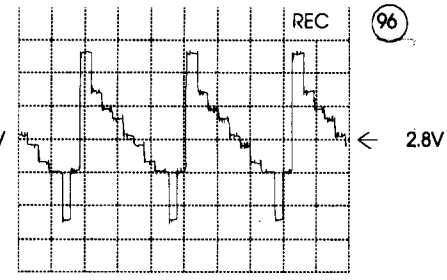

A: AC, 200mV/Div, 20us/Div
IC 7520 Pin 48

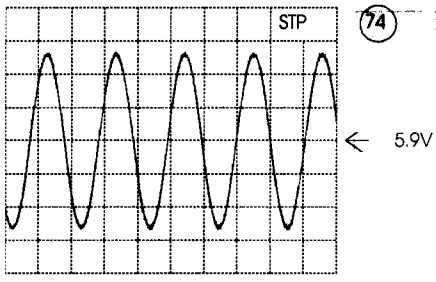

A: AC, 200mV/Div, 500us/Div
IC 7400 Pin 21/22

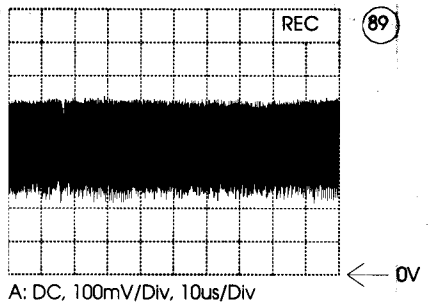

A: DC, 100mV/Div, 10us/Div
Connector 1530 Pin 6

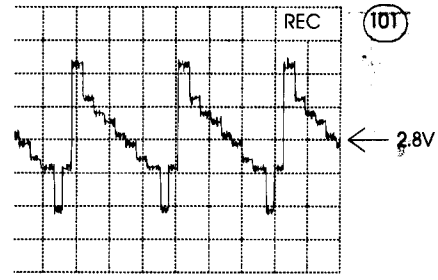

A: AC, 100mV/Div, 20us/Div
IC 7520 Pin 6

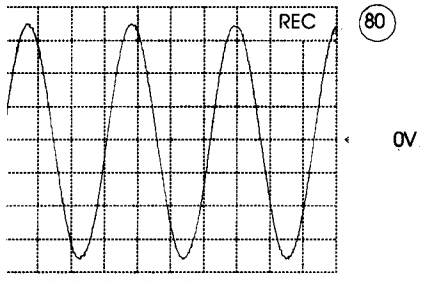

A: DC, 5 V/Div, 5us/Div
Connector 1503 Pin 1

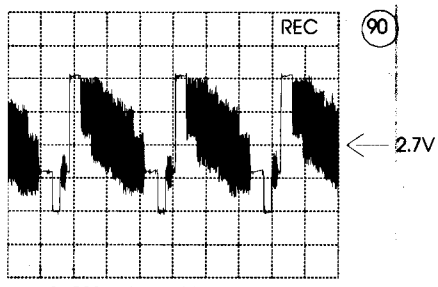

A: AC, 500mV/Div, 20us/Div
Connector 1526 Pin 9

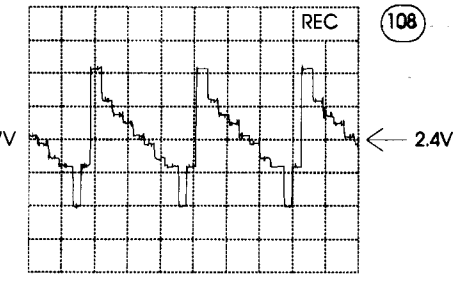

A: AC, 500mV/Div, 20us/Div
IC 7520 Pin 43

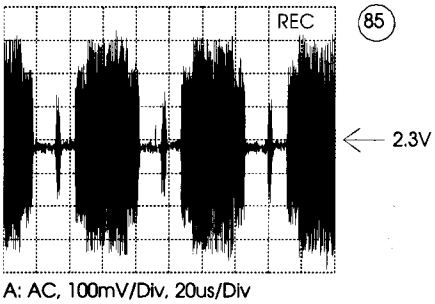

A: AC, 100mV/Div, 20us/Div
Connector 1524 Pin 2

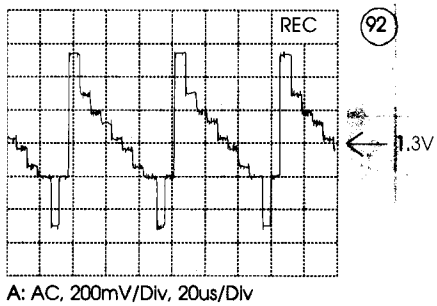

A: AC, 200mV/Div, 20us/Div
IC 7010 Pin 14

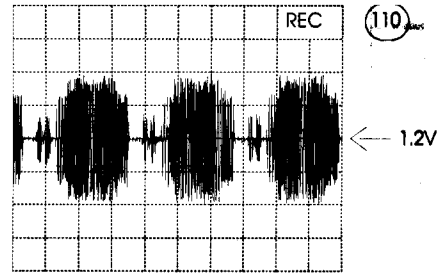

A: AC, 200mV/Div, 20us/Div
Connector 1525 Pin 14

Block Diagram Digital

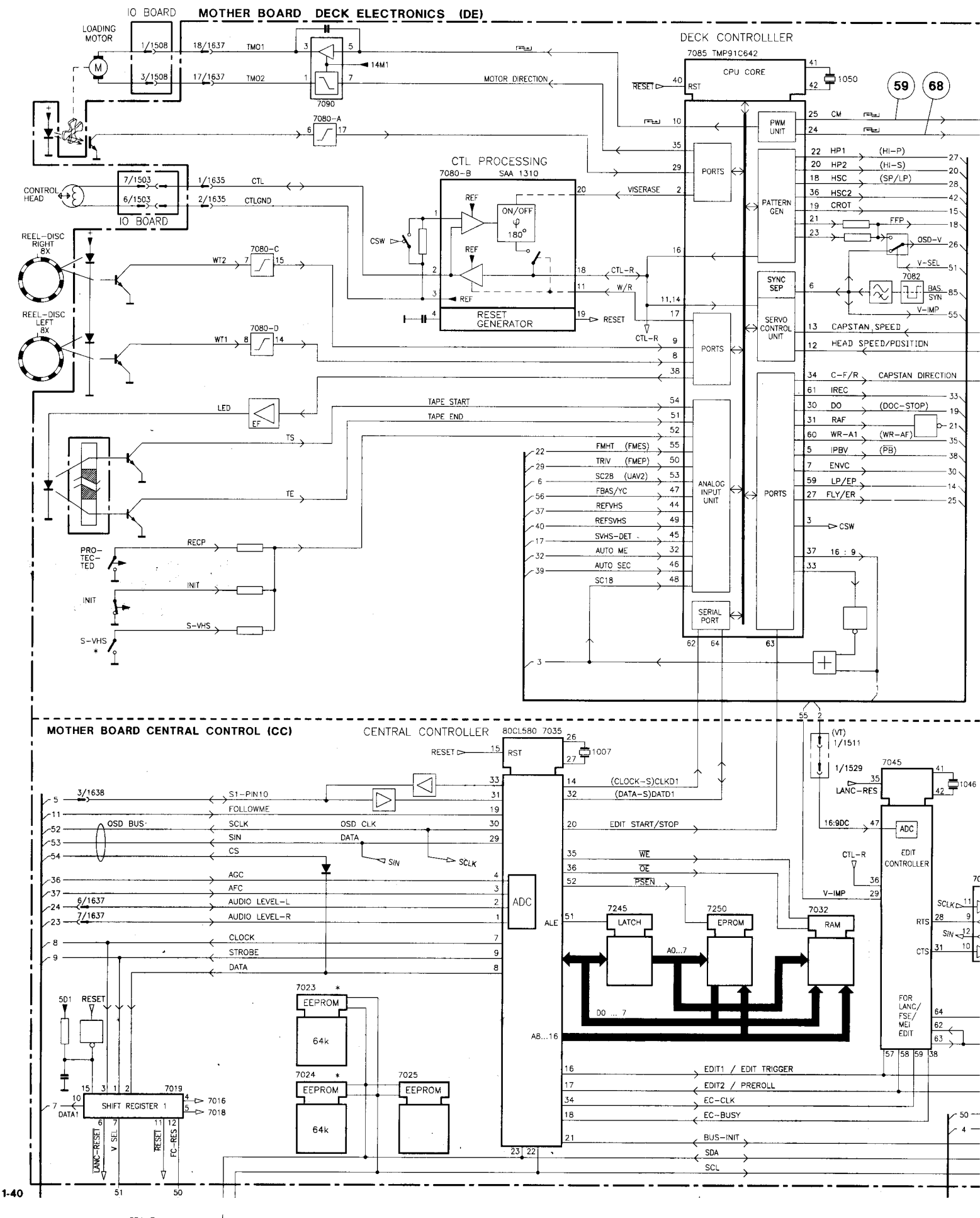

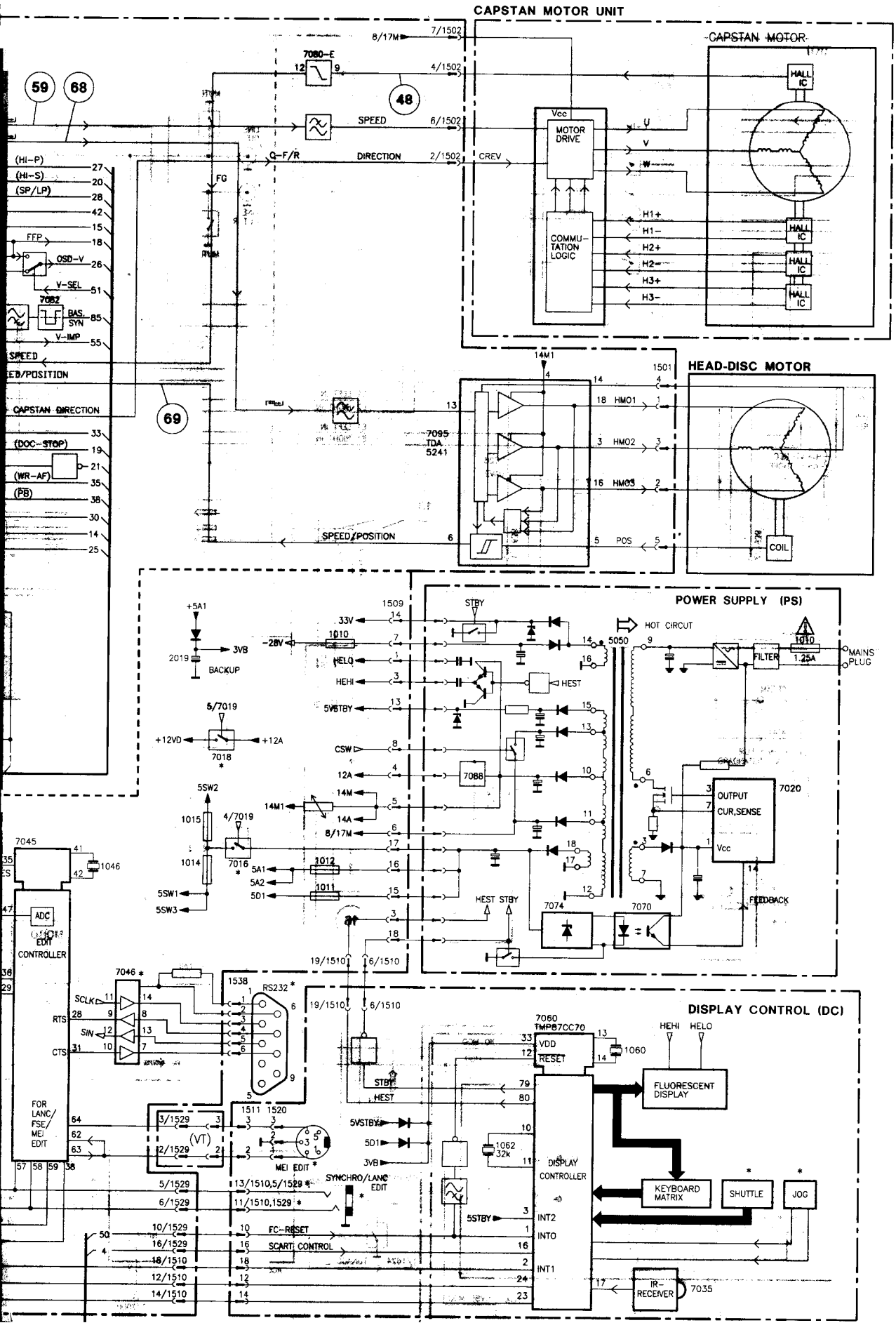
CAPSTAN MOTOR UNIT
CAPSTAN MOTOR
HALL IC
MOTOR DRIVE
COMMU-TATION LOGIC
Vcc
U
V
W
H1+
H1-
H2+
H2-
H3+
H3-
7080-E
SPEED
DIRECTION
F/R
FG
CREV
8/17M
7/1502
4/1502
6/1502
2/1502
48
59
68
69
(HI-P)
(HI-S)
(SP/LP)
FFP
OSD-V
V-SEL
7082
BAS. SYN
V-IMP
SPEED
EED/POSITION
CAPSTAN DIRECTION
(DOC-STOP)
(WR-AF)
(PB)
HEAD-DISC MOTOR
14M1
1501
7095 TDA 5241
HM01
HM02
HM03
POS
SPEED/POSITION
COIL
POWER SUPPLY (PS)
+5A1
3VB
BACKUP
2019
-28V
1509
1010
33V
HELO
HEHI
5VSTBY
CSW
12A
14M
14A
8/17M
5D1
5A1
5A2
HEST STBY
STBY
HEST
HOT CIRCUT
5050
FILTER
1.25A
MAINS PLUG
OUTPUT
CUR.SENSE
Vcc
7020
FEEDBACK
7074
7070
7088
5/7019
7018
+12VD
+12A
5SW2
5SW1
5SW3
1015
1014
4/7019
7016
1012
1011
7045
ADC
EDIT CONTROLLER
1046
7046
RS232
SCLK
RTS
SIN
CTS
1538
19/1510
6/1510
DISPLAY CONTROL (DC)
7060 TMP87CC70
VDD
RESET
1060
HEHI
HELO
FLUORESCENT DISPLAY
KEYBOARD MATRIX
SHUTTLE
JOG
DISPLAY CONTROLLER
1062 32k
5STBY
INT2
INTO
INT1
IR-RECEIVER
7035
FOR LANC/ FSE/ MEI EDIT
MEI EDIT
SYNCHRO/LANC EDIT
FC-RESET
SCART CONTROL
13/1510,5/1529
11/1510,1529
10/1529
16/1529
18/1510
12/1510
14/1510
3/1529
12/1529
5/1529
6/1529
1511
1520
(VT)

Block Diagram Analog VHS

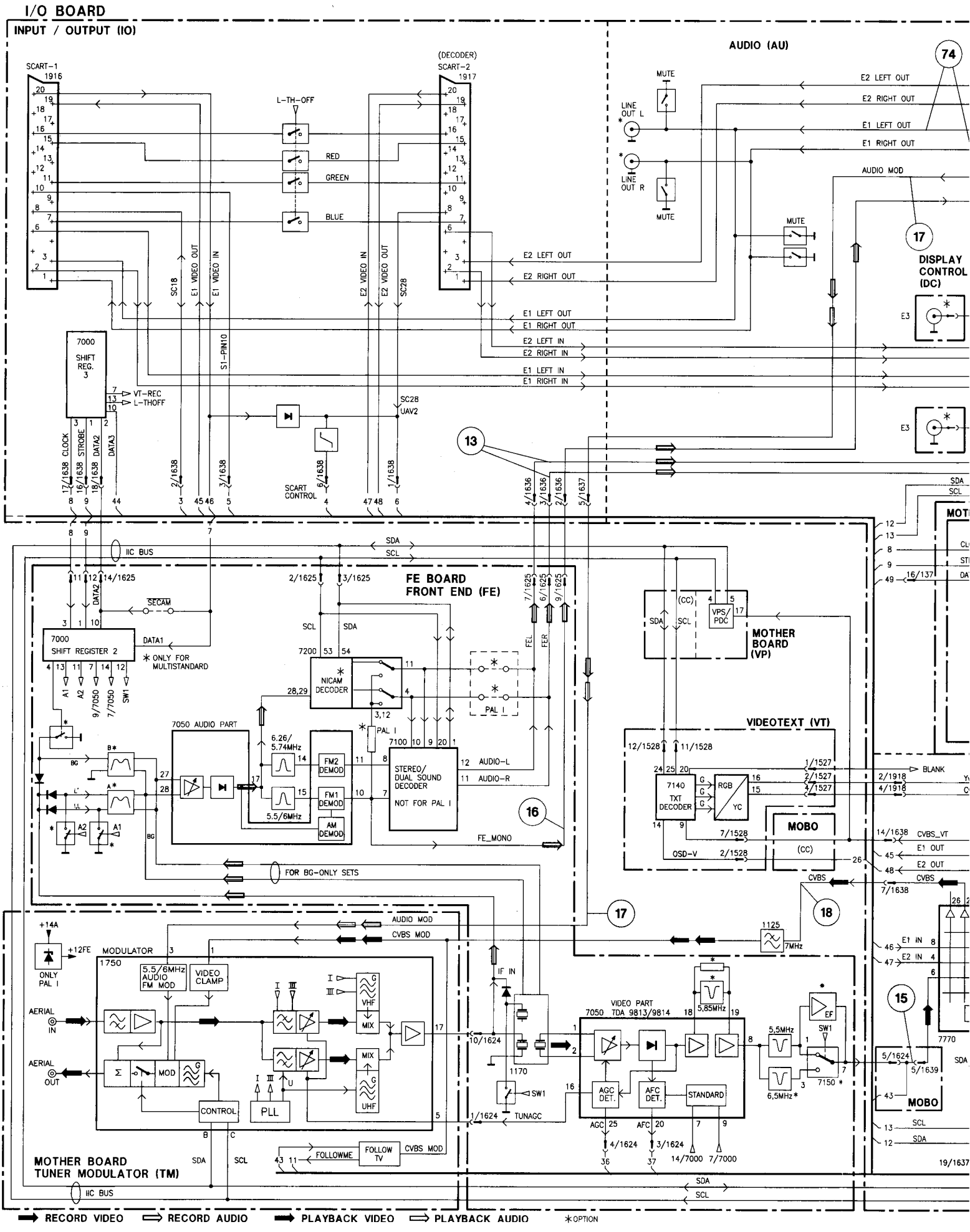

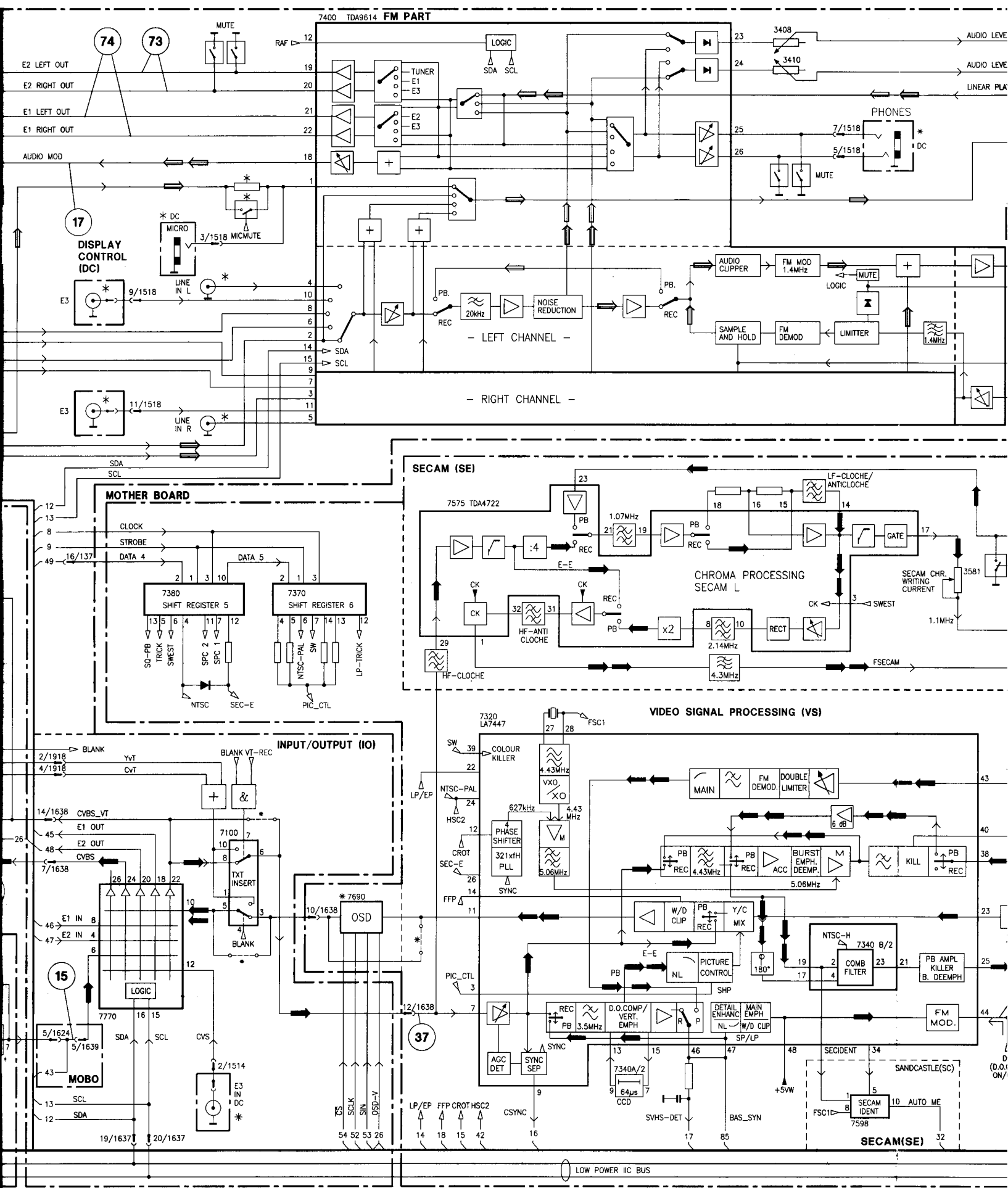
7400 TDA9614 FM PART
MUTE
74
73
E2 LEFT OUT
E2 RIGHT OUT
E1 LEFT OUT
E1 RIGHT OUT
AUDIO MOD
RAF
LOGIC
SDA SCL
TUNER
E1
E3
E2
E3
3408
3410
AUDIO LEVE
AUDIO LEVE
LINEAR PLA
PHONES
7/1518
5/1518
DC
MUTE
17
DISPLAY CONTROL (DC)
DC
MICRO
3/1518 MICMUTE
LINE IN L
9/1518
E3
PB.
REC
20kHz
NOISE REDUCTION
PB.
REC
AUDIO CLIPPER
FM MOD 1.4MHz
MUTE
LOGIC
SAMPLE AND HOLD
FM DEMOD
LIMITTER
1.4MHz
SDA
SCL
- LEFT CHANNEL -
- RIGHT CHANNEL -
11/1518
LINE IN R
E3
SDA
SCL
MOTHER BOARD
CLOCK
STROBE
DATA 4
DATA 5
16/1371
7380 SHIFT REGISTER 5
7370 SHIFT REGISTER 6
SQ-PB
TRICK
SWEST
SPC 2
SPC 1
NTSC-PAL
SW
LP-TRICK
NTSC
SEC-E
PIC_CTL
SECAM (SE)
7575 TDA4722
PB
REC
1.07MHz
:4
E-E
CK
HF-ANTI CLOCHE
HF-CLOCHE
CHROMA PROCESSING SECAM L
LF-CLOCHE/ ANTICLOCHE
GATE
SECAM CHR. WRITING CURRENT
3581
1.1MHz
SWEST
x2
2.14MHz
RECT
4.3MHz
FSECAM
INPUT/OUTPUT (IO)
BLANK
YvT
CvT
BLANK VT-REC
14/1638 CVBS_VT
E1 OUT
E2 OUT
CVBS
7/1638
7100
TXT INSERT
BLANK
E1 IN
E2 IN
LOGIC
7770
15
5/1624
5/1639
MOBO
SDA
SCL
CVS
2/1514
E3 IN DC
19/1637
20/1637
7690
OSD
10/1638
CS
SCLK
SIN
OSD-V
54 52 53 26
VIDEO SIGNAL PROCESSING (VS)
7320 LA7447
FSC1
SW
COLOUR KILLER
LP/EP
NTSC-PAL
HSC2
CROT
SEC-E
FFP
SYNC
4.43MHz
VXO
XO
627kHz
4.43 MHz
4 PHASE SHIFTER
321xfH PLL
5.06MHz
MAIN
FM DEMOD.
DOUBLE LIMITER
6 dB
PB
REC
4.43MHz
ACC
BURST EMPH. DEEMP.
5.06MHz
KILL
W/D CLIP
Y/C MIX
NL
PICTURE CONTROL
SHP
180°
NTSC-H
7340 B/2
COMB FILTER
PB AMPL KILLER B. DEEMPH
PIC_CTL
12/1638
37
D.O.COMP/ VERT. EMPH
3.5MHz
DETAIL ENHANC
MAIN EMPH
NL
W/D CLIP
SP/LP
FM MOD.
AGC DET
SYNC SEP
SYNC
7340A/2
64µs
CCD
+5VW
SECIDENT
SANDCASTLE(SC)
SECAM IDENT
7598
AUTO ME
FSC1
SECAM(SE)
SVHS-DET
BAS_SYN
CSYNC
LP/EP FFP CROT HSC2
14 18 15 42
16
17
85
32
LOW POWER IIC BUS

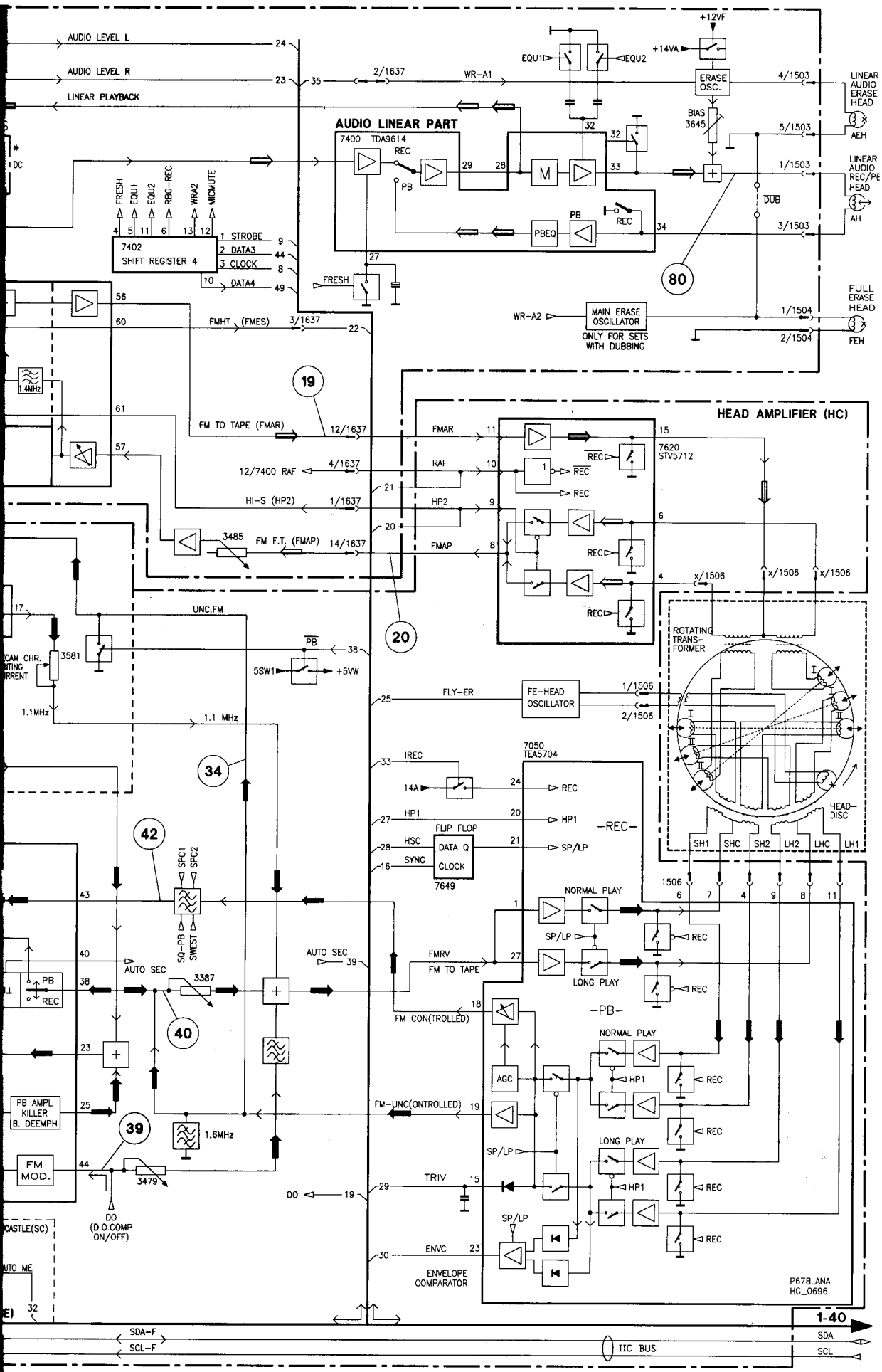
AUDIO LEVEL L
AUDIO LEVEL R
LINEAR PLAYBACK
AUDIO LINEAR PART
7400 TDA9614
REC
PB
PBEQ
M
EQU1
EQU2
+12VF
+14VA
ERASE OSC.
BIAS 3645
DUB
LINEAR AUDIO ERASE HEAD
AEH
LINEAR AUDIO REC/PB HEAD
AH
FULL ERASE HEAD
FEH
WR-A1
WR-A2
MAIN ERASE OSCILLATOR
ONLY FOR SETS WITH DUBBING
FRESH
EQU1
EQU2
RBG-REC
WRA2
MICMUTE
7402 SHIFT REGISTER 4
STROBE
DATA3
CLOCK
DATA4
FMHT (FMES)
FM TO TAPE (FMAR)
12/7400 RAF
HI-S (HP2)
FM F.T. (FMAP)
HEAD AMPLIFIER (HC)
7620 STV5712
FMAR
RAF
HP2
FMAP
ROTATING TRANS-FORMER
HEAD-DISC
SH1
SHC
SH2
LH2
LHC
LH1
UNC.FM
5SW1
+5VW
FLY-ER
FE-HEAD OSCILLATOR
1.1MHz
1.1 MHz
IREC
14A
7050 TEA5704
HP1
FLIP FLOP
HSC
SYNC
DATA Q
CLOCK
7649
SP/LP
-REC-
NORMAL PLAY
LONG PLAY
FMRV
FM TO TAPE
FM CON(TROLLED)
-PB-
AGC
FM-UNC(ONTROLLED)
TRIV
ENVC
ENVELOPE COMPARATOR
SPC1
SPC2
SQ-PB
SWEST
AUTO SEC
3387
PB AMPL KILLER B. DEEMPH
FM MOD.
1,6MHz
3479
DO (D.O.COMP ON/OFF)
DO
CASTLE(SC)
AUTO ME
SDA-F
SCL-F
IIC BUS
SDA
SCL
P67BLANA HG_0696
1-40

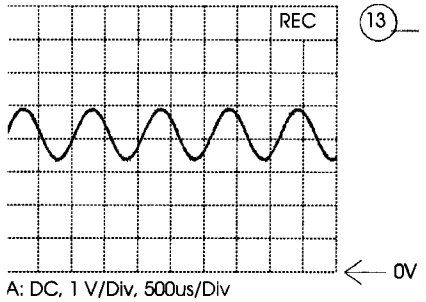

A: DC, 1 V/Div, 500us/Div
IC 7100 Pin 11/12

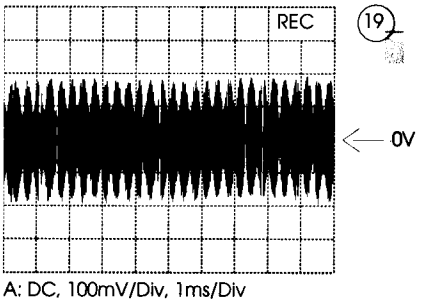

A: DC, 100mV/Div, 1ms/Div
Connector 1637 Pin 12

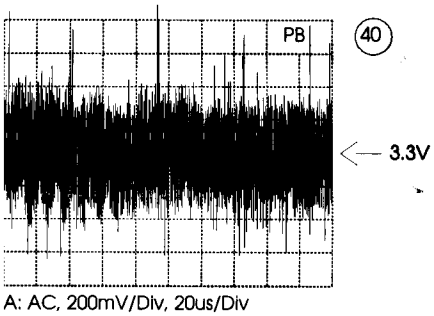

A: AC, 200mV/Div, 20us/Div
IC 7320 Pin 38

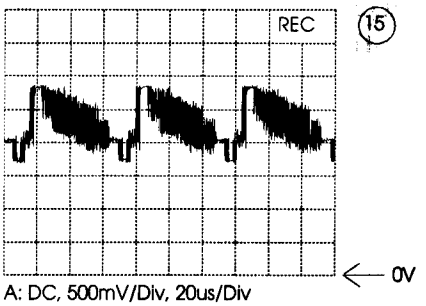

A: DC, 500mV/Div, 20us/Div
Connector 1624 Pin 5

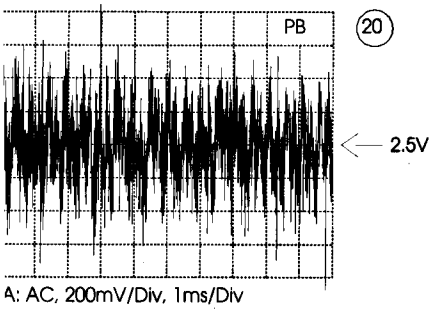

A: AC, 200mV/Div, 1ms/Div
Connector 1637 Pin 14

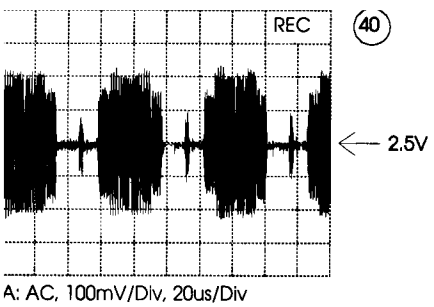

A: AC, 100mV/Div, 20us/Div
IC 7320 Pin 38

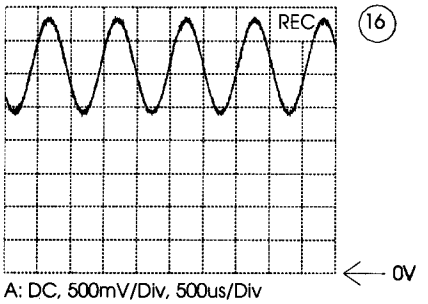

A: DC, 500mV/Div, 500us/Div
Connector 1625 Pin 9

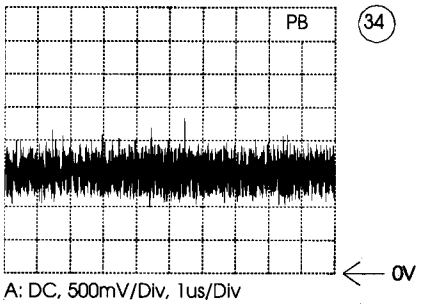

A: DC, 500mV/Div, 1us/Div
IC 7600 Pin 19

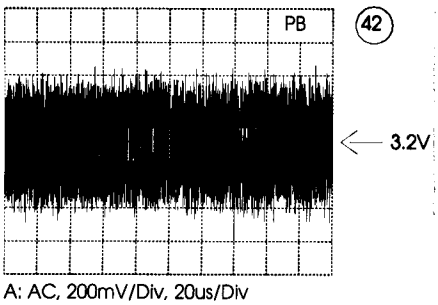

A: AC, 200mV/Div, 20us/Div
IC 7320 Pin 43

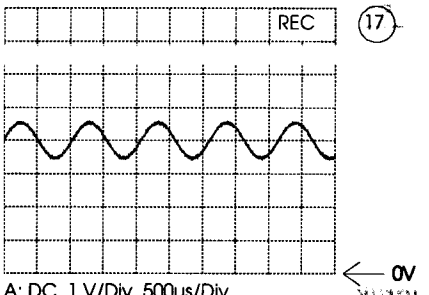

A: DC, 1 V/Div, 500us/Div
Connector 1637 Pin 5

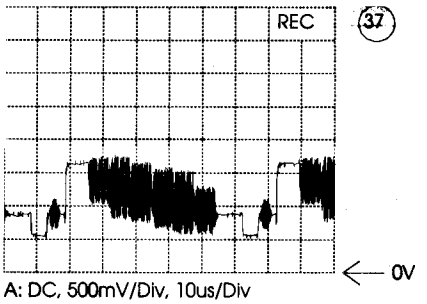

A: DC, 500mV/Div, 10us/Div
Connector 1638 Pin 12

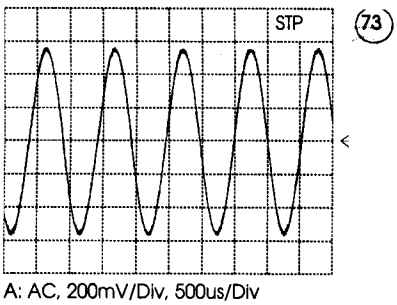

A: AC, 200mV/Div, 500us/Div
IC 7400 Pin 19/20

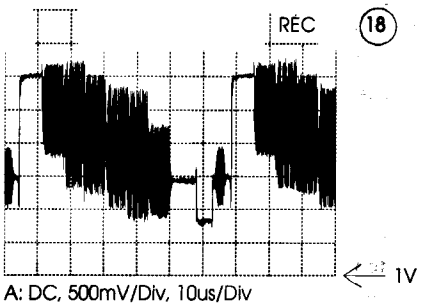

A: DC, 500mV/Div, 10us/Div
Connector 1638 Pin 7

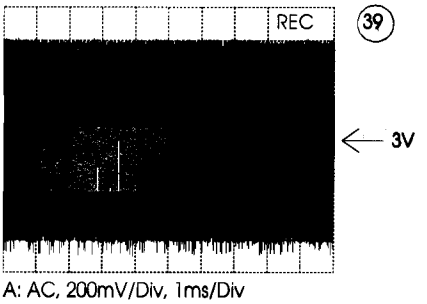

A: AC, 200mV/Div, 1ms/Div
IC 7320 Pin 44

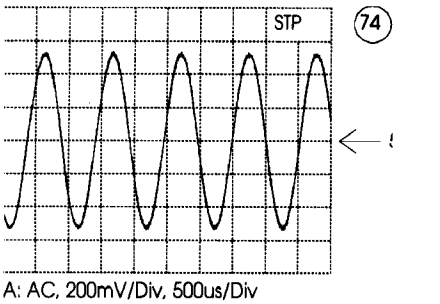

A: AC, 200mV/Div, 500us/Div
IC 7400 Pin 21/22

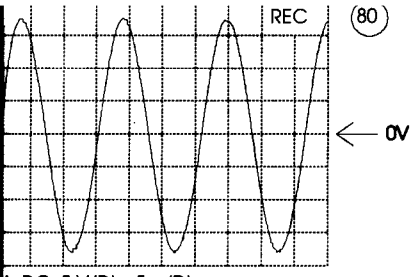

A: DC, 5 V/Div, 5us/Div
Connector 1503 Pin 1

Interconnections:

PS page 3-27	SE page 3-35	DE page 3-38	VP page 3-41	VT page 3-46	SF page 3-53
FE page 3-29/31	HC page 3-36	OS page 3-39	IO page 3-44	CF page 3-50	SP page 3-54
TM page 3-34	VS page 3-37	CC page 3-40	AU page 3-45	SH page 3-51	DC page 3-57...

Power Supply PSM

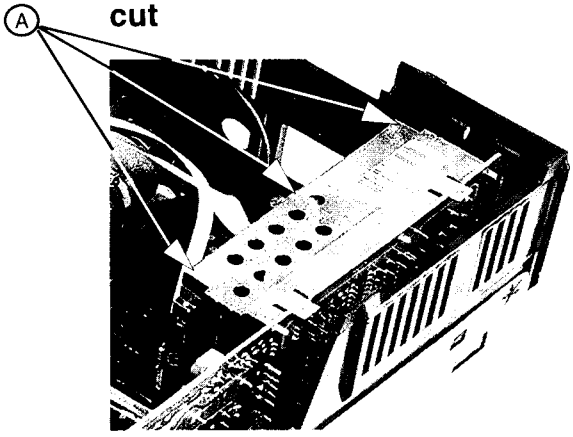

Fig.1

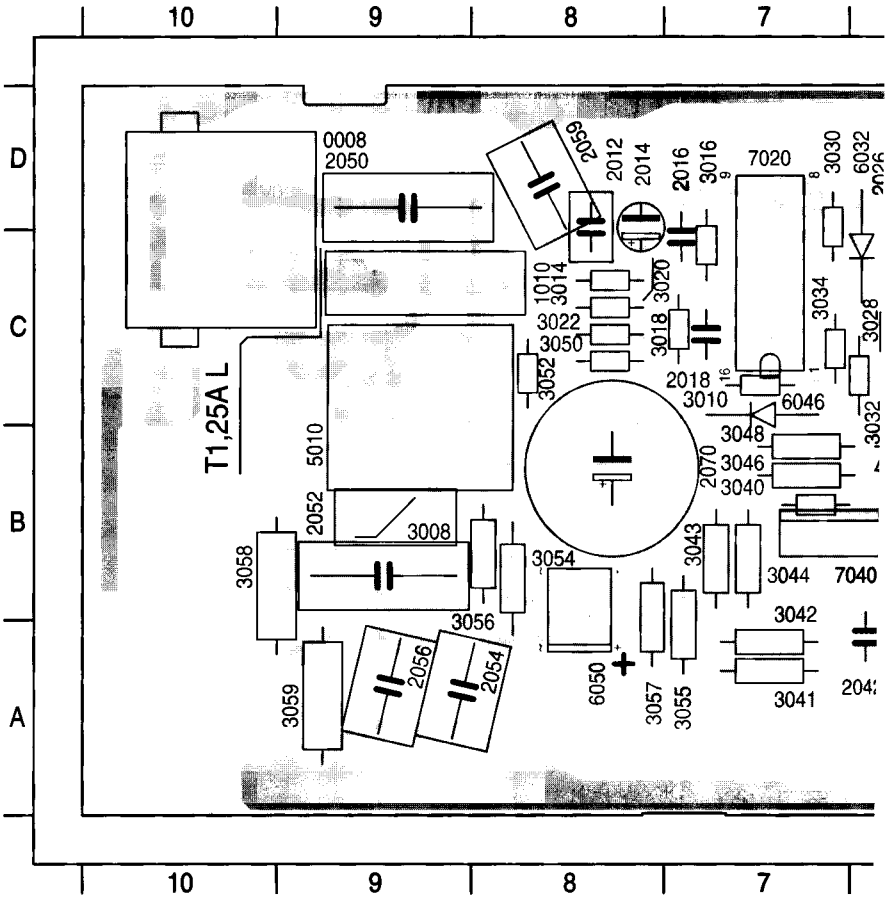

0008 D 10	2032 D 6	2062 A 4	2081 B 3	3008 B 9	3028 C 6	3046 B 7
1010 C 9	2036 C 6	2064 A 2	2084 B 3	3010 C 7	3030 D 6	3048 B 7
1509 A 2	2042 A 6	2068 A 3	2085 B 1	3012 D 6	3032 C 6	3050 C 8
2012 D 8	2050 D 9	2069 A 4	2088 B 3	3014 C 8	3034 C 6	3052 C 8
2014 D 7	2052 B 9	2070 B 8	2090 B 3	3016 C 7	3040 B 7	3054 B 8
2016 C 7	2054 A 8	2074 D 4	2092 B 2	3018 C 7	3041 A 7	3055 B 7
2018 C 7	2056 A 9	2076 C 4	2096 C 3	3020 C 8	3042 A 7	3056 B 8
2026 C 6	2059 D 8	2079 B 2	2098 C 2	3022 C 8	3043 B 7	3057 B 7
2030 D 5	2060 A 3	2080 C 3	2099 C 2	3026 C 6	3044 B 7	3058 B 9

(GB) How to remove the power supply shield
Cut the three slicing plates **A**, see Fig. 1.

(D) Wie entferne ich die Abdeckung des Power Supply
Die 3 Stege **A** (mittels Seitenschneider) durchtrennen, siehe Fig. 1.

(NL) Verwijderen afscherming voedingseenheid
Knip de drie lipjes **A** (m.b.v. zijkniptang) door, zie fig. 1.

(F) Comment retirer le blindage de l'alimentation
Coupez les trois ergots métalliques **A**, voir Fig. 1.

(I) Come rimuovere la schermatura dell'alimentatore
Tagliare i tre punti di connesione **A**, vedere fig. 1.

(E) Como retirar el apantallamiento de la fuente de alimentación
Cortar las tres pestañas **A**, ver Fig. 1.

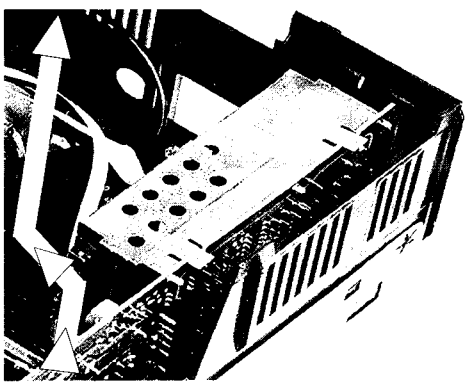

Fig. 2

(GB) Lift-up the shield cover about 3mm, disengage it and pull it out (see Fig. 2).
Note: To mount the shield cover please proceed in the reverse order.

(D) Die Abdeckung an der Oberseite 3 mm anheben und nach innen abziehen, siehe Fig. 2. Die Montage erfolgt in umgekehrter Reihenfolge.

(NL) Til het afschermingsdeksel aan de bovenzijde 3 mm op, draai deze naar binnen, zie fig. 2. Nu kan de afscherming verwijderd worden.
Opm: De montage van de afscherming geschiedt in omgekeerde volgorde.

(F) Soulevez le blindage de 3mm vers le haut, dégagez-le vers la gauche et retirez-le (voir Fig. 2).
Pour remettre en place le blindage, procédez dans l'ordrte inverse.

(I) Sollevare il coperchio dalla parte superiore di circa 3 mm e ruotarlo per toglierlo, vedere fig. 2.
Ora la schermatura può essere tolta.
Nota: Per rimontare la schermatura, procedere in ordine inverso.

(E) Levantar la tapa de pantalla 3 mm, girarla y tirar de ella hacia arriba, ver Fig. 2.
Ahora el apantallamiento puede ser retirado.
Nota: Para montar el apantallamiento proceder en el orden inverso.

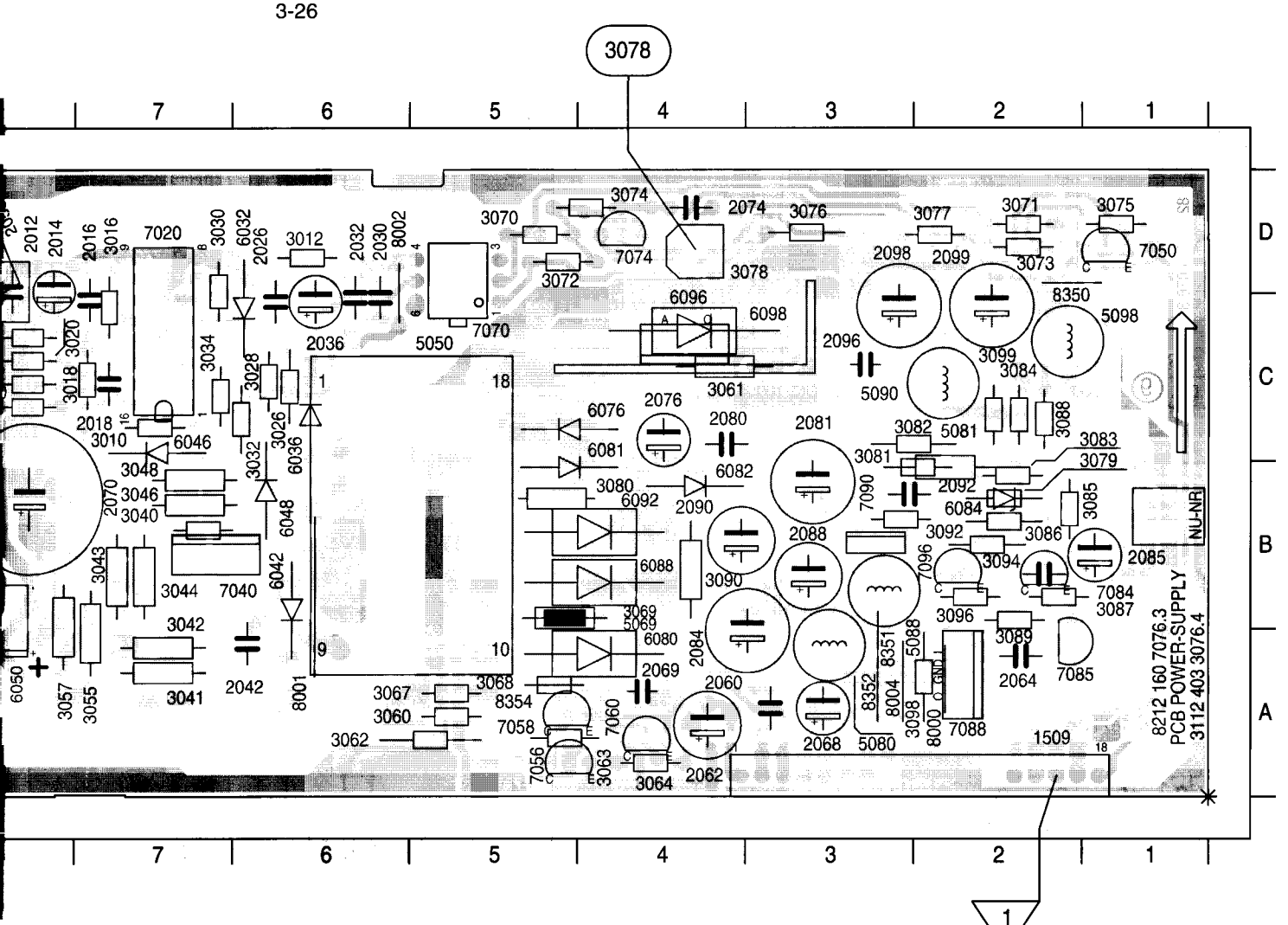

3028 C 6	3046 B 7	3059 A 9	3070 D 5	3079 B 2	3088 C 2	5050 B 5	6042 B 6		7056 A 4	7096 B 2	
3030 D 6	3048 B 7	3060 A 5	3071 D 2	3080 B 4	3089 B 2	5069 B 4	6046 C 7		7058 A 4	8000 A 2	
3032 C 6	3050 C 8	3061 C 3	3072 D 4	3081 B 2	3090 B 4	5080 A 3	6048 B 6	6088 B 4	7060 A 4	8001 B 6	
3034 C 6	3052 C 8	3062 A 5	3073 D 2	3082 C 2	3092 B 2	5081 B 2	6050 B 8	6092 B 4	7070 D 5	8002 D 5	
3040 B 7	3054 B 8	3063 A 4	3074 D 4	3083 B 2	3094 B 2	5088 B 2	6076 C 4	6096 C 4	7074 D 4	8004 A 2	
3041 A 7	3055 B 7	3064 A 4	3075 D 1	3084 C 2	3096 B 2	5090 C 2	6080 A 4	6098 C 4	7084 B 1	8350 D 1	
3042 A 7	3056 B 8	3067 A 5	3076 D 3	3085 B 1	3098 A 2	5098 C 1	6081 B 4	7020 C 7	7085 A 1	8351 A 2	
3043 B 7	3057 B 7	3068 A 4	3077 D 2	3086 B 2	3099 C 2	6032 C 6	6082 B 4	7040 B 6	7088 A 2	8352 A 2	
3044 B 7	3058 B 9	3069 B 4	3078 D 4	3087 B 1	5010 C 9	6036 C 6	6084 B 2	7050 D 1	7090 B 3	8354 A 4	

B **solder**

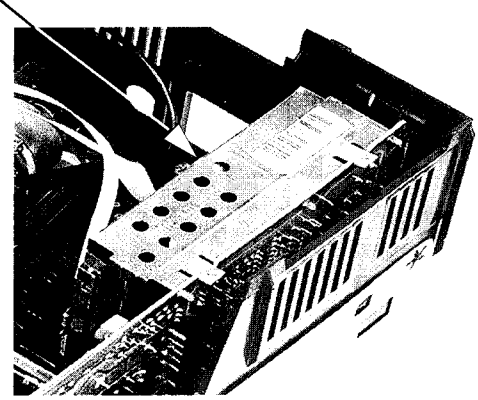

Fig.3

nach innen
eihenfolge.

pp, draai
rd worden.
erde

GB **Important:**
After mounting the shield plate it is indispensable that the splicing plate B is resoldered for safety reasons, see Fig. 3.

D **Achtung:**
Nach Montage des Deckels muß der Steg B unbedingt aus Sicherheitsgründen mit dem Gehäuse verlötet werden, siehe Fig. 3

NL **Belangrijk:**
Na montage van de afschermplaat is het noodzakelijk dat het lipje B om veiligheidsredenen weer aan het huis gesoldeerd wordt, zie fig. 3.

F **Important:**
Une fois le blindage remis en place, il est indispensable de resouder l'ergot B pour des raisons de sécurité. voir Fig. 3.

I **Importante:**
Dopo aver montato la schermatura è indispensabile per ragioni di sicurezza saldare accuratamente la piastra B , vedere fig. 3.

E **Importante:**
Despues de montar el apantallamiento es indispensable que la pestaña B quede soldada por razones de seguridad, ver Fig. 3.

Power Supply PSM (PS)

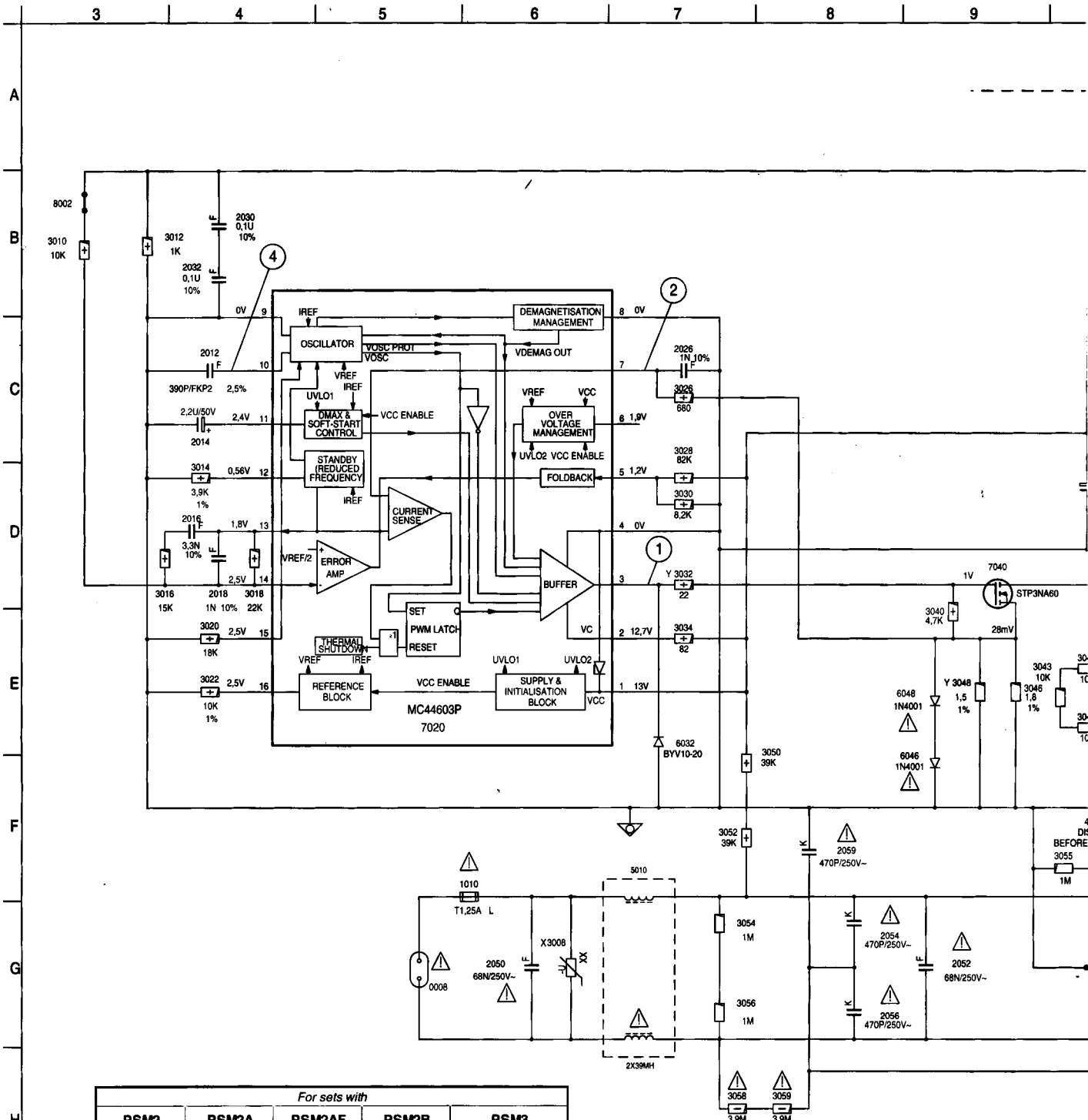

	For sets with				
	PSM2	PSM2A	PSM2AF	PSM2B	PSM3
A	Low P.Std.By	--	--	Low P.Std.By	Low P.Std.By
B	Turbo Drive	Turbo Drive	Turbo Drive	Turbo Drive	Turbo Drive
0014	--	--	--	--	Heat Sink(S-VHS)
0015	--	--	--	--	Clip (S-VHS)
2081	470µF/50V	47µF/50V	47µF/50V	470µF/50V	470µF/50V
2079	--	X	X	--	--
2099	X	X	X	X	X
3032	47	47	47	47	22
3048	1R5 1%	1R5 1%	1R5 1%	1R5 1%	1R5 1%
3061	X	X	X	2µ2	2µ2
3079	--	X	X	--	--
5050	Transf. B	Transf. B	Transf. D	Transf. D	Transf. D
5081	--	X	X	--	--
6084	X	--	--	X	X
6096	--	--	--	--	X
6098	X	X	X	X	--
8350	X	X	X	X	X
8351	--	--	--	--	--
8352	X	X	X	X	X

NICHT NETZGETRENNTER SCHAL
CIRCUIT NOT MAINS-ISOLATE

* ...Discharge Pos

Transformer Type C (CU-Foil) is electr. equiv. to Transformer Type A
Transformer Type D (CU-Foil) is electr. equiv. to Transformer Type B

PCB Power Supply, PS

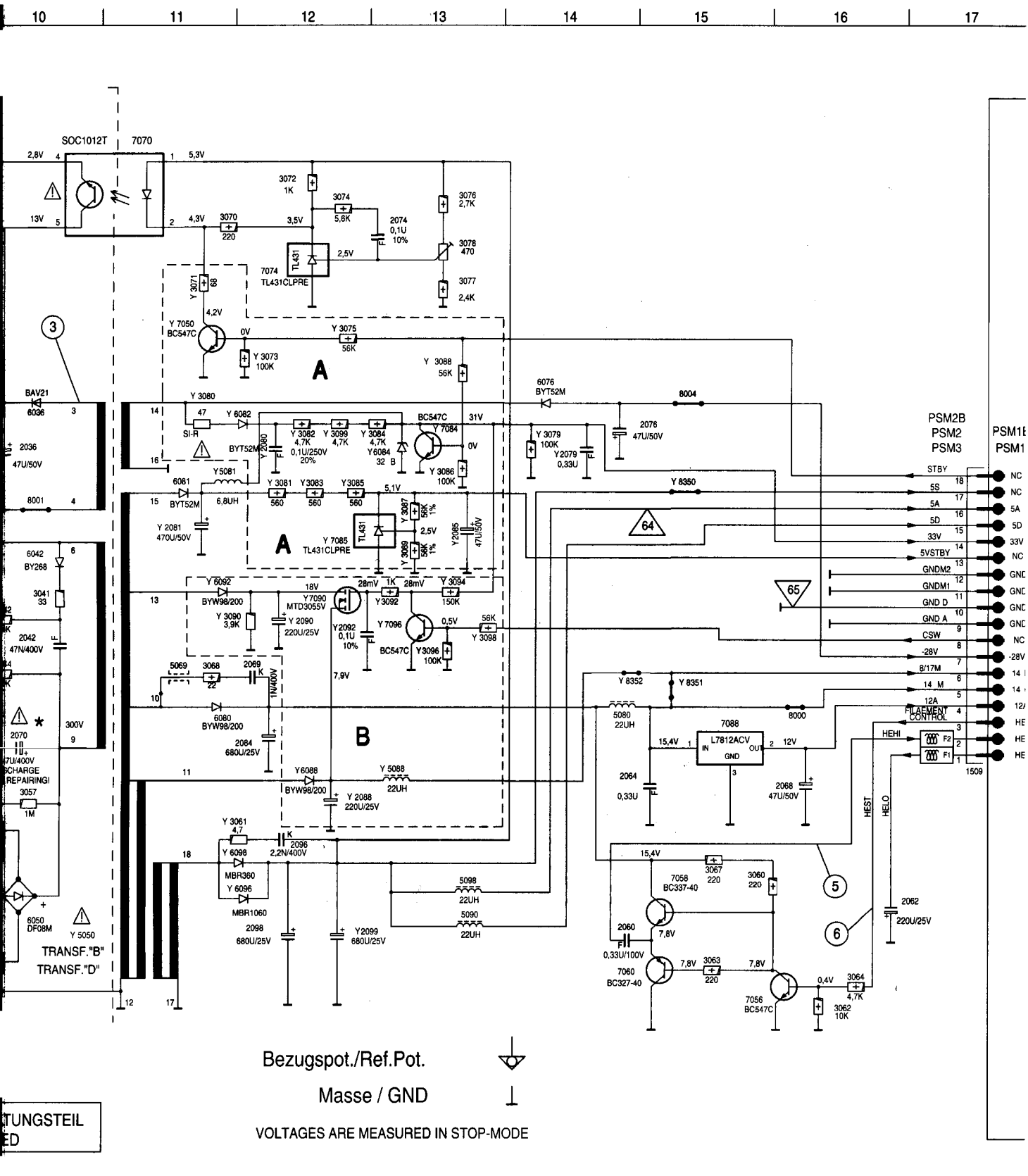

NOTE ON THE COMPOI

"X" components are not used

"Y" components are optional

2070 before repairing

Voltages measured in STOP-Mode

10 11 12 13 14 15 16 17

18 19

PSM2AF
PSM2A

NC
5S
5A
5D
33V
NC
GNDM2
GNDM1
GNDD
GNDA
CSW
-28V
8/17M
14 M
12A
HEST
HEHi
HELO

PCB MOTHER BOARD, CC

TRANSF."A","C"

3 14 16 4 15 6 10 9 18 12 17

Y5050

A	0008 G5	3094 E13
	1010 F6	3096 E13
	1509 F17	3098 E13
	2012 C4	3099 D12
	2014 C4	5010 F7
	2016 D4	5050 G10
	2018 D4	5069 E11
	2026 C7	5080 F14
	2030 B4	5081 D11
	2032 B4	5088 F13
B	2036 D10	5090 G13
	2042 E10	5098 G13
	2050 G6	6032 E7
	2052 G9	6036 C10
	2054 G8	6042 D10
	2056 G8	6046 F9
	2059 F8	6048 E9
	2060 G14	6050 G10
	2062 G17	6076 C14
	2064 F14	6080 F11
C	2068 F16	6081 D11
	2069 E12	6082 C12
	2070 F10	6084 D13
	2074 B13	6088 F12
	2076 C15	6092 E11
	2079 D14	6096 G12
	2080 D12	6098 G12
	2081 D11	7020 E5
	2084 F12	7040 D9
	2085 D13	7050 C11
D	2088 F12	7056 H15
	2090 E12	7058 G15
	2092 E12	7060 H14
	2096 G12	7070 A11
	2098 G12	7074 B12
	2099 G13	7084 D13
	3008 G6	7085 D12
	3010 B3	7088 F15
	3012 B4	7090 E12
	3014 D4	7096 E13
	3016 D3	
E	3018 D4	
	3020 E4	
	3022 E4	
	3026 C7	
	3028 C7	
	3030 D7	
	3032 D7	
	3034 E7	
	3040 E9	
	3041 E10	
	3042 E10	
F	3043 E9	
	3044 E10	
	3046 E9	
	3048 E9	
	3050 E8	
	3052 F7	
	3054 G7	
	3055 F10	
	3056 G7	
	3057 F10	
G	3058 H7	
	3059 H8	
	3060 G15	
	3061 F12	
	3062 H16	
	3063 G15	
	3064 H16	
	3067 G15	
	3068 E11	
	3070 B11	
	3071 B11	
	3072 B12	
	3073 C12	
	3074 B12	
H	3075 C12	
	3076 B13	
	3077 B13	
	3078 B13	
	3079 D14	
	3080 C11	
	3081 D12	
	3082 D12	
	3083 D12	
	3084 D13	
I	3085 D12	
	3086 D13	
	3087 D13	
	3088 C13	
	3089 D13	
	3090 E11	
	3092 E13	

Playback:

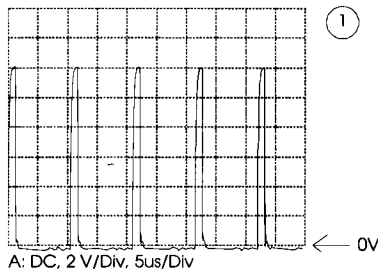

A: DC, 2 V/Div, 5us/Div
IC 7020 Pin 3

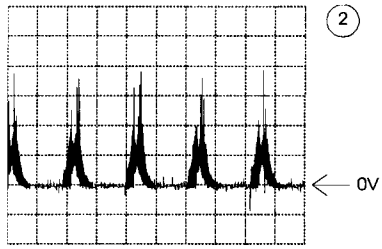

A: DC, 200mV/Div, 5us/Div
IC 7020 Pin 7

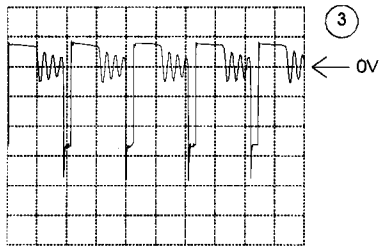

A: DC, 20 V/Div, 5us/Div
Diode 6036 Anode

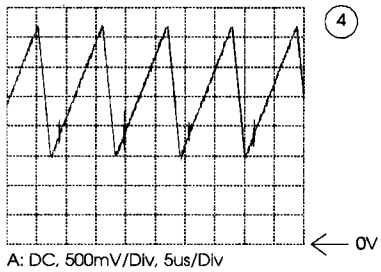

A: DC, 500mV/Div, 5us/Div
IC 7020 Pin 10

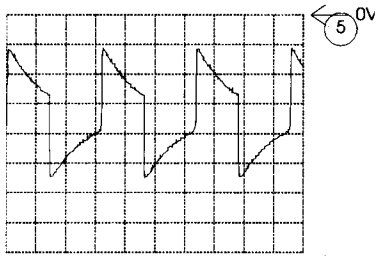

A: DC, 5 V/Div, 10us/Div
Connector 1509 Pin 2

Low Power Standby:

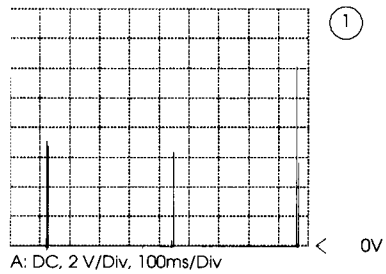

A: DC, 2 V/Div, 100ms/Div
IC 7020 Pin 3

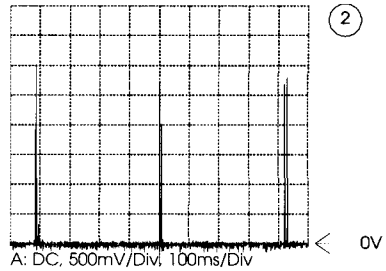

A: DC, 500mV/Div, 100ms/Div
IC 7020 Pin 7

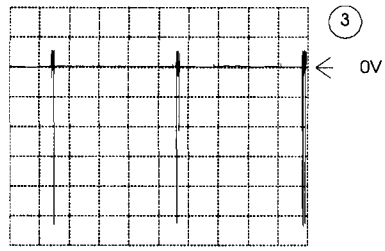

A: DC, 10 V/Div, 100ms/Div
Diode 6036 Anode

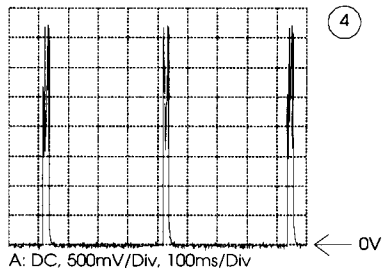

A: DC, 500mV/Div, 100ms/Div
IC 7020 Pin 10

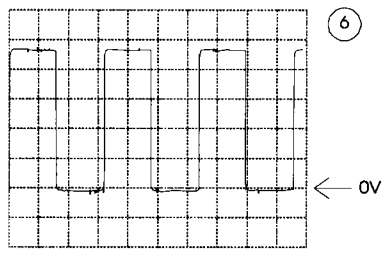

A: DC, 1 V/Div, 10us/Div
Connector 1509 Pin 3

Interconnections:

PS page 3-27	SE page 3-35	DE page 3-38	VP page 3-41	VT page 3-46	SF page 3-53
FE page 3-29/31	HC page 3-36	OS page 3-39	IO page 3-44	CF page 3-50	SP page 3-54
TM page 3-34	VS page 3-37	CC page 3-40	AU page 3-45	SH page 3-51	DC page 3-57...

Note on the components: "X" components are not used "Y" components are optional

18 19

Front End Board PAL B/G/I

Conventional Assembly

View of components side

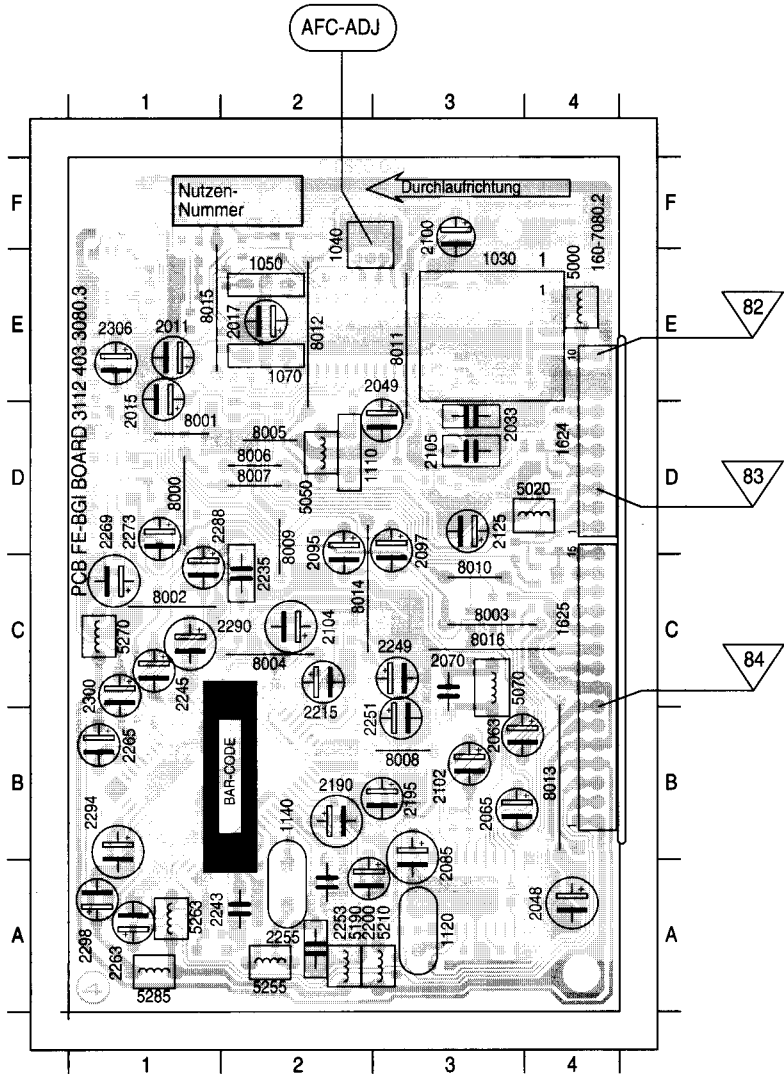

XX = Testpoint (XXX) = Adjustment

0902 B 2	2049 D 3	2215 C 2	2298 A 1	8002 C 1
1030 E 3	2063 B 4	2235 C 2	2300 C 1	8003 C 3
1040 F 3	2065 B 3	2243 A 2	2306 E 1	8004 C 2
1050 E 2	2070 C 3	2245 C 1	5000 E 4	8005 D 2
1070 E 2	2085 B 3	2249 C 3	5020 D 4	8006 D 2
1110 D 2	2095 D 2	2251 B 3	5050 D 2	8007 D 2
1120 A 3	2097 D 3	2253 A 2	5070 C 3	8008 B 3
1140 A 2	2100 F 3	2255 A 2	5190 A 2	8009 D 2
1624 D 4	2102 B 3	2263 A 1	5210 A 3	8010 C 3
1625 C 4	2104 C 2	2265 B 1	5255 A 2	8011 E 3
2011 E 1	2105 D 3	2269 C 1	5263 A 1	8012 E 2
2015 E 1	2125 D 3	2273 D 1	5270 C 1	8013 B 4
2017 E 2	2190 B 2	2288 C 1	5285 A 1	8014 C 2
2033 D 3	2195 B 3	2290 C 1	8000 D 1	8015 E 2
2048 A 4	2200 A 3	2294 B 1	8001 D 1	8016 C 3

SMD Assembly

View of solder side

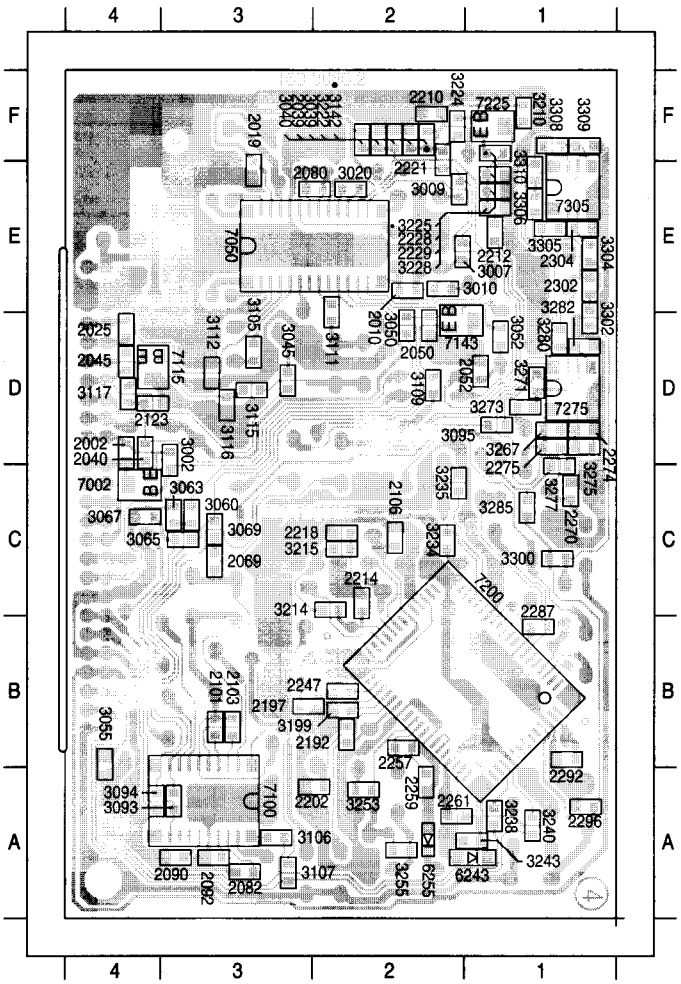

2002 D 4	2214 C 2	3040 F 2	3199 B 2	3300 C 1
2010 E 2	2218 C 2	3045 D 3	3210 F 1	3302 D 1
2019 E 3	2221 F 2	3050 D 2	3214 C 2	3304 E 1
2025 D 4	2228 E 1	3052 D 1	3215 C 2	3305 E 1
2039 F 2	2229 E 1	3055 B 4	3222 F 2	3306 E 1
2040 D 4	2247 B 2	3060 C 3	3224 F 2	3308 F 1
2045 D 4	2257 B 2	3063 C 3	3225 F 1	3309 F 1
2050 D 2	2259 A 2	3065 C 3	3228 E 1	3310 E 1
2052 D 1	2261 A 2	3067 C 4	3234 C 2	6243 A 1
2069 C 3	2270 C 1	3069 C 3	3235 C 2	6255 A 2
2080 E 3	2274 D 1	3093 A 3	3238 A 1	7002 C 4
2082 A 3	2275 D 1	3094 A 4	3240 A 1	7050 E 3
2090 A 3	2287 B 1	3095 D 1	3243 A 1	7100 A 3
2092 A 3	2292 B 1	3105 D 3	3253 A 2	7115 D 4
2101 B 3	2296 A 1	3106 A 3	3255 A 2	7143 D 2
2103 B 3	2302 E 1	3107 A 3	3267 D 1	7200 B 2
2106 C 2	2304 E 1	3109 D 2	3271 D 1	7225 F 1
2123 D 4	3002 D 3	3111 E 2	3273 D 1	7275 D 1
2192 B 2	3007 E 2	3112 D 3	3275 D 1	7305 E 1
2197 B 3	3009 E 2	3115 D 3	3277 D 1	
2202 A 3	3010 E 2	3116 D 3	3280 D 1	
2210 F 2	3020 E 2	3117 D 4	3282 D 1	
2212 E 1	3039 F 2	3142 F 2	3285 C 1	

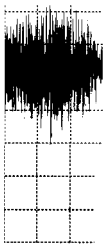

A: DC, 500r
Connector

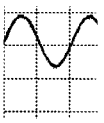

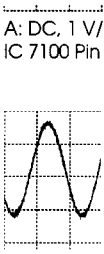

A: DC, 1 V/
IC 7100 Pin

A: DC, 500r
Connector

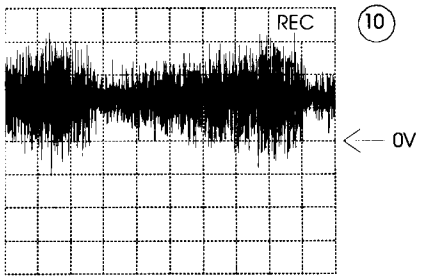

A: DC, 500mV/Div, 10us/Div
Connector 1624 Pin 10

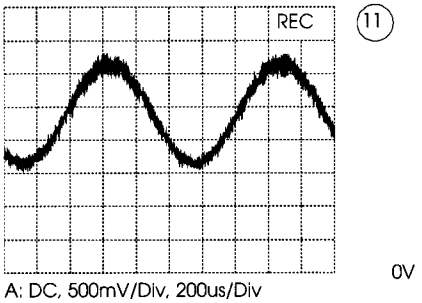

A: DC, 500mV/Div, 200us/Div
IC 7050 Pin 10

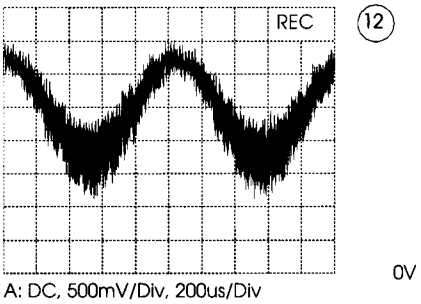

A: DC, 500mV/Div, 200us/Div
IC 7050 Pin 11

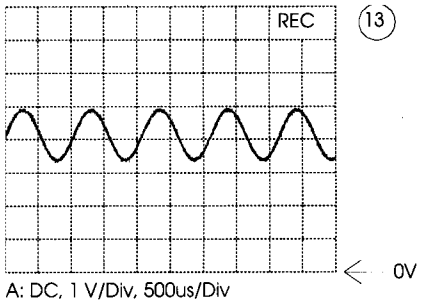

A: DC, 1 V/Div, 500us/Div
IC 7100 Pin 11/12

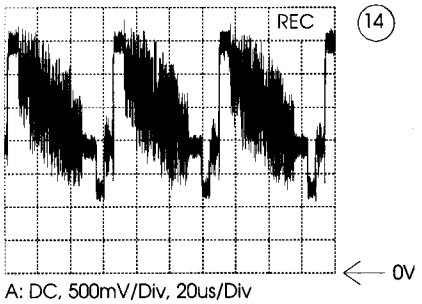

A: DC, 500mV/Div, 20us/Div
IC 7050 Pin 8

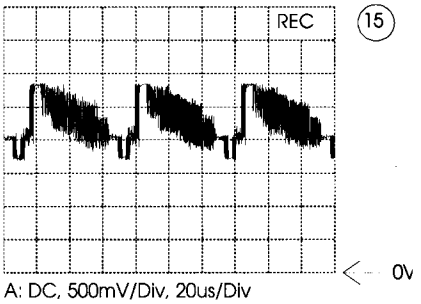

A: DC, 500mV/Div, 20us/Div
Connector 1624 Pin 5

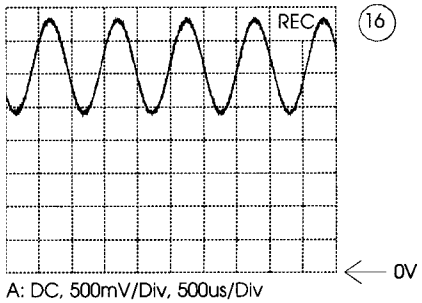

A: DC, 500mV/Div, 500us/Div
Connector 1625 Pin 9

Front End Board PAL B/G/I (FE)

1030 G4	1140 F25	2015 F9	2040 I9	2063 C13	2085 G14	2101 E13	2123 H11	2200 D22	2218 F22	2245 B26	2257 F25	2270 B29	2290 E27	2302 F28	3010 C8	3052 F12	3069 D12	3107
1040 D7	1624 H2	2017 F9	2045 I7	2065 D13	2090 B15	2102 E13	2125 H11	2202 D22	2221 F20	2247 F23	2259 F25	2273 C29	2292 E28	2304 F27	3020 G9	3055 F12	3093 C17	3109
1050 D8	1625 F2	2019 F10	2048 F13	2069 E12	2092 B15	2103 E13	2190 C22	2210 E21	2228 G21	2249 F23	2261 F26	2274 C27	2294 E28	2306 F29	3039 H8	3060 C12	3094 C17	3111
1070 D8	2002 H5	2025 H6	2049 F5	2070 E12	2095 B18	2104 D22	2192 C22	2212 E21	2229 G21	2251 F23	2263 F26	2275 C28	2296 E28	3002 H5	3040 H9	3063 C12	3095 B18	3112
1110 H10	2010 D8	2033 H7	2050 G11	2080 D7	2097 B18	2105 H7	2195 C22	2214 E22	2235 C24	2253 G24	2265 G26	2287 E27	2298 E28	3007 C8	3045 I7	3065 D12	3105 H7	3115
1120 G15	2011 E9	2039 H8	2052 F12	2082 F13	2100 H7	2106 D22	2197 C22	2215 F21	2243 C25	2255 G24	2269 B29	2288 D27	2300 E27	3009 C9	3050 F11	3067 D12	3106 E17	3116

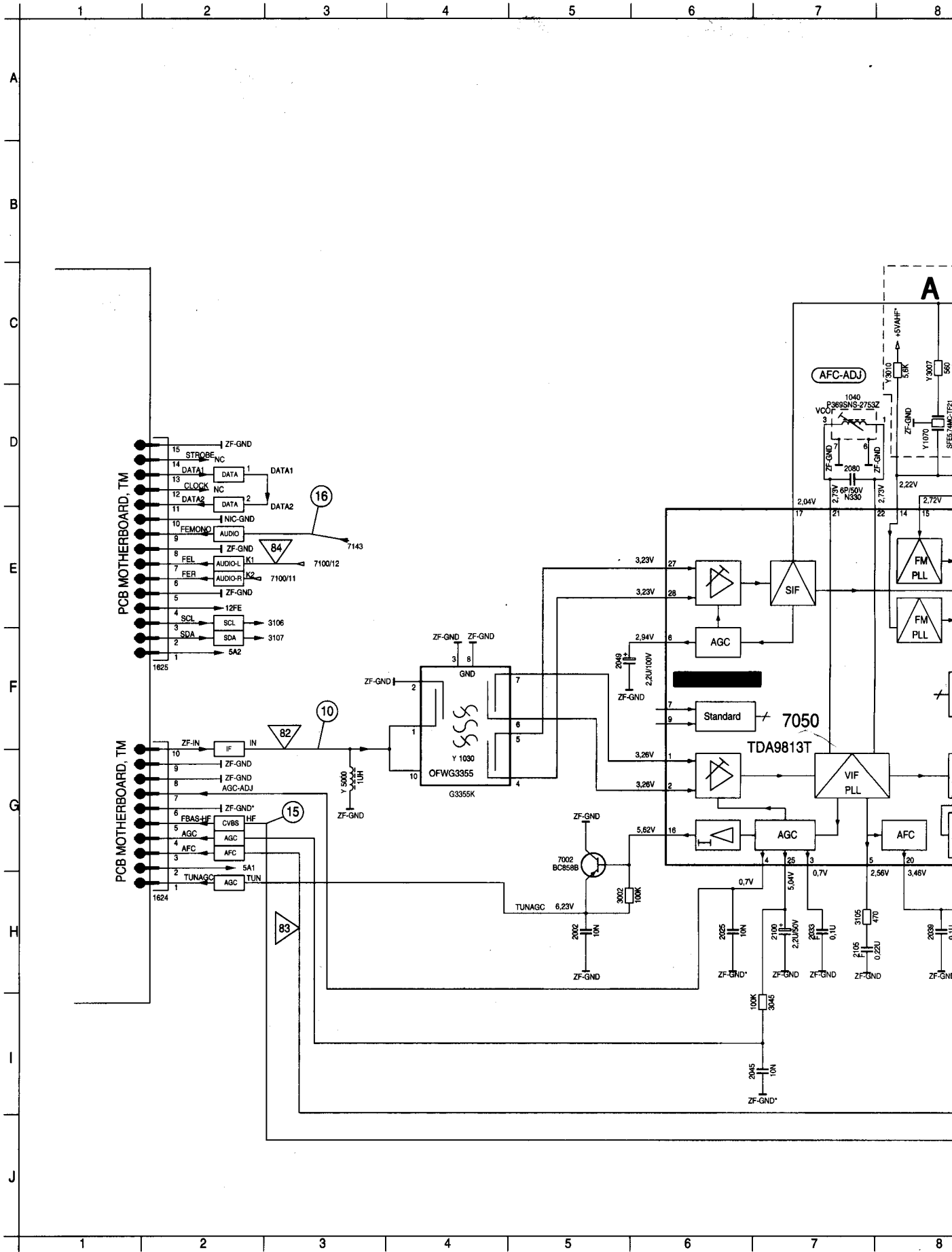

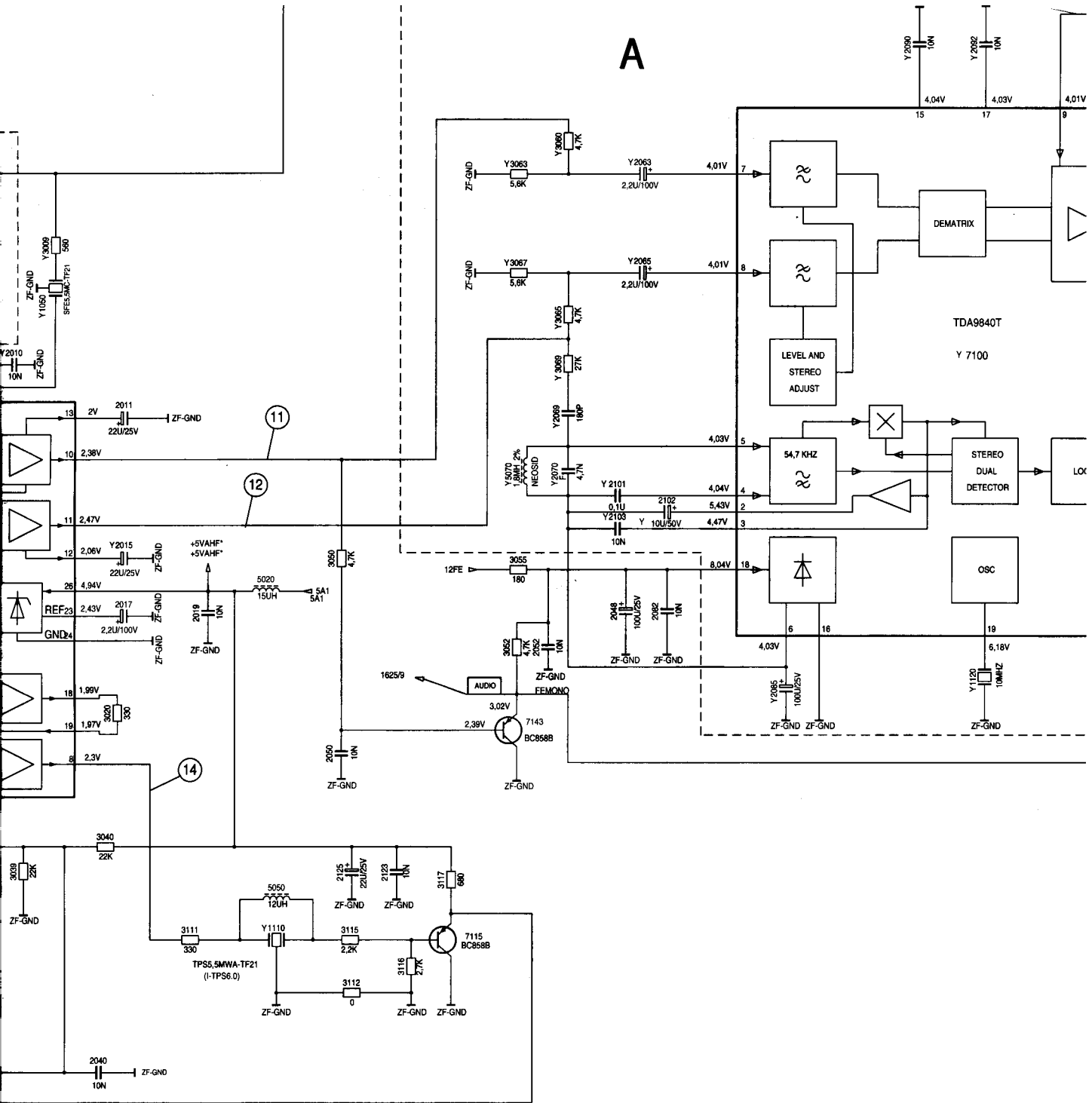
A
TDA9840T
Y 7100
DEMATRIX
LEVEL AND STEREO ADJUST
54,7 KHZ
STEREO DUAL DETECTOR
OSC
AUDIO
FEMONO
NEOSID
REF
GND
TPS5,5MWA-TF21
(I-TPS6.0)
ZF-GND
+5VAHF*
+5VAHF*
12FE
1625/9
7143
BC858B
7115
BC858B
Y1110
Y1050
SFE5,5MC-TF21
Y1120
10MHZ
Y2090
10N
Y2092
10N
Y3060
4,7K
Y3063
5,6K
Y2063
2,2U/100V
Y3067
5,6K
Y2065
2,2U/100V
Y3065
4,7K
Y3069
27K
Y2069
180P
Y5070
1,8MH 2%
Y2070
4,7N
Y2101
0,1U
Y2103
10N
2102
10U/50V
Y2085
100U/25V
Y2048
100U/25V
Y2082
10N
Y3009
560
Y2010
10N
2011
22U/25V
Y2015
22U/25V
2017
2,2U/100V
2019
10N
5020
15UH
5A1
3050
4,7K
3055
180
3052
4,7K
2052
10N
3020
330
2050
10N
3040
22K
3039
22K
2125
22U/25V
2123
10N
3117
680
5050
12UH
3111
330
3115
2,2K
3116
2,7K
3112
0
2040
10N
4,04V
4,03V
4,01V
4,01V
4,01V
4,03V
4,04V
5,43V
4,47V
8,04V
4,03V
6,18V
2V
2,38V
2,47V
2,06V
4,94V
2,43V
1,99V
1,97V
2,3V
3,02V
2,39V

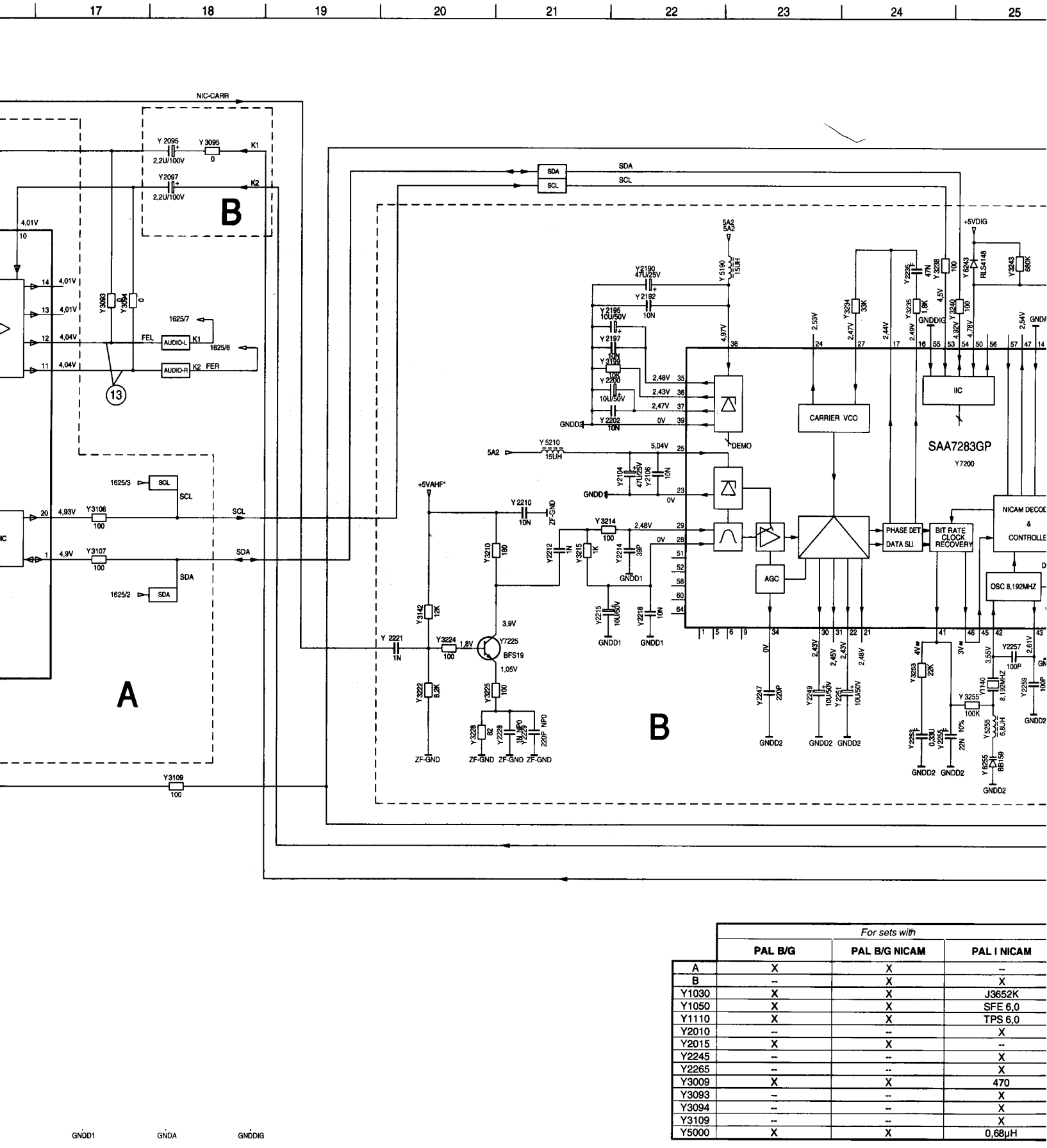

	For sets with		
	PAL B/G	**PAL B/G NICAM**	**PAL I NICAM**
A	X	X	--
B	--	X	X
Y1030	X	X	J3652K
Y1050	X	X	SFE 6,0
Y1110	X	X	TPS 6,0
Y2010	--	--	X
Y2015	X	X	--
Y2245	--	--	X
Y2265	--	--	X
Y3009	X	X	470
Y3093	--	--	X
Y3094	--	--	X
Y3109	--	--	X
Y5000	X	X	0,68µH

Interconnections:

PS page 3-27	SE page 3-35	DE page 3-38	VP page 3-41	VT page 3-46	SF page 3-53
FE page 3-29/31	HC page 3-36	OS page 3-39	IO page 3-44	CF page 3-50	SP page 3-54
TM page 3-34	VS page 3-37	CC page 3-40	AU page 3-45	SH page 3-51	DC page 3-57...

Note on the components: "X" components are not used "Y" components are optional

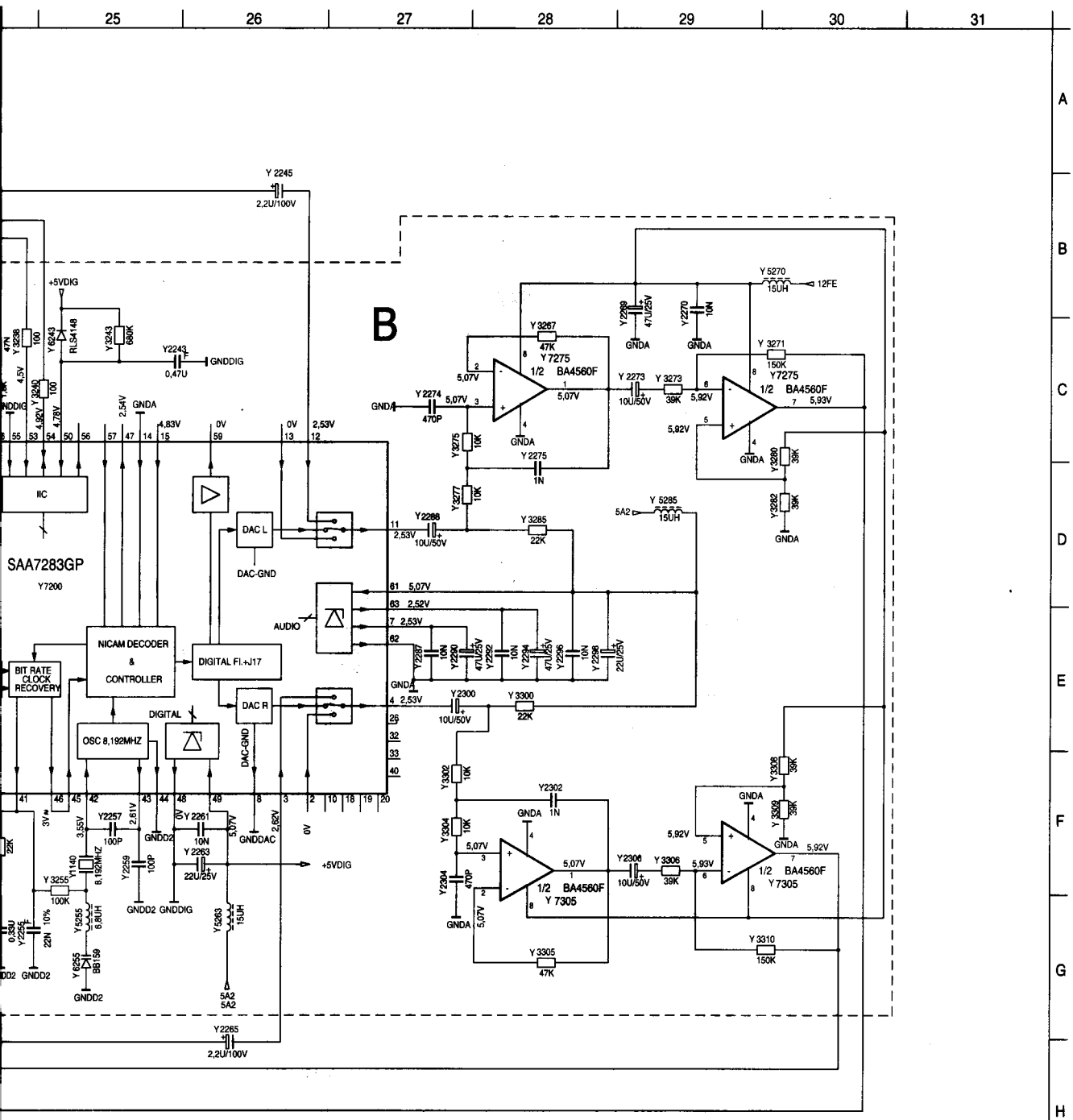

	PAL I NICAM
	X
	J3652K
	SFE 6,0
	TPS 6,0
	X
	--
	X
	X
	470
	X
	X
	X
	0,68µH

Front End Board Multistandard

Conventional Assembly

View of components side

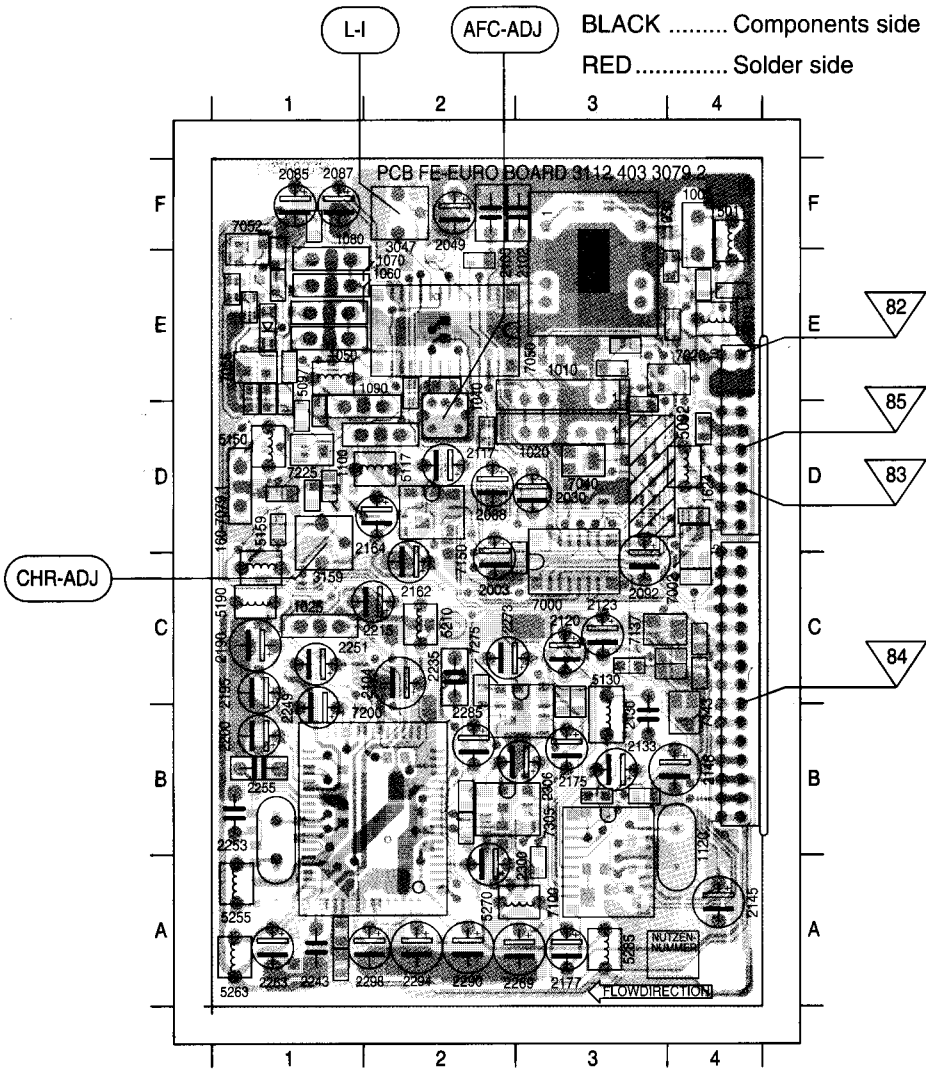

1005	F 4	1624	D 4	2130	B 3	2251	C 1	5011	F 4
1010	E 3	1625	C 4	2133	B 3	2253	B 1	5092	D 4
1020	D 3	2003	C 2	2145	A 4	2255	B 1	5097	E 1
1025	C 1	2030	D 3	2148	B 4	2263	A 1	5117	D 2
1030	E 3	2049	F 2	2162	C 2	2269	A 3	5130	B 3
1040	D 2	2085	F 1	2164	D 2	2273	C 2	5150	D 1
1050	E 1	2087	F 1	2175	B 3	2285	B 2	5159	C 1
1060	E 1	2088	D 2	2177	A 3	2290	A 2	5190	C 1
1070	E 1	2092	C 3	2190	C 1	2294	A 2	5210	C 2
1080	E 1	2102	F 3	2195	C 1	2298	A 2	5255	A 1
1090	D 2	2104	C 2	2200	B 1	2300	A 2	5263	A 1
1100	D 2	2105	F 2	2215	C 2	2306	B 3	5270	A 3
1110	D 1	2117	D 2	2235	C 2	3047	F 2	5285	A 3
1120	B 4	2120	C 3	2243	A 1	3159	D 1		
1140	B 1	2123	C 3	2249	C 1	5010	E 4		

SMD Assembly

View of components side

BLACK ..... Components side

RED ..... Solder side

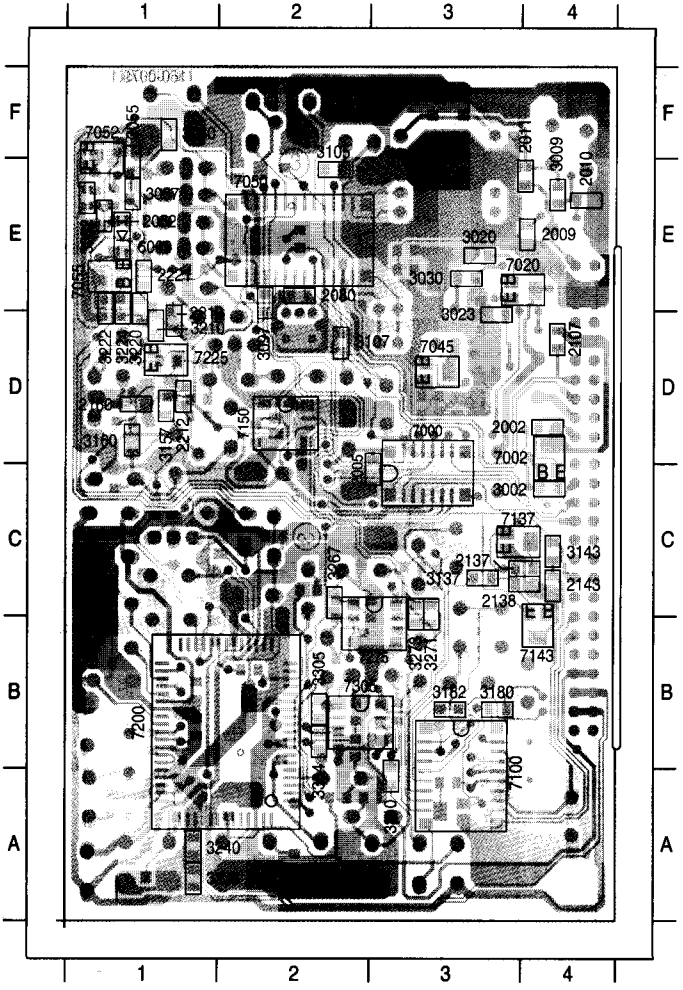

2002	D 4	2210	D 1	3107	D 2	3267	C 2	7055	E 1
2005	C 3	2212	D 1	3137	C 3	3271	C 3	7100	A 3
2009	E 4	2221	E 1	3143	C 4	3273	C 3	7137	C 4
2010	E 4	3002	C 4	3157	D 1	3304	B 2	7143	B 4
2011	E 4	3009	E 4	3160	D 1	3305	B 2	7150	D 2
2052	E 1	3020	E 3	3180	B 3	3310	A 3	7200	B 2
2055	F 1	3023	E 3	3182	B 3	6069	E 1	7225	D 1
2080	E 2	3030	E 3	3210	D 1	7000	C 3	7275	B 3
2107	D 4	3052	E 1	3220	E 1	7002	D 4	7305	B 2
2137	C 4	3057	E 1	3222	E 1	7020	E 4		
2138	C 4	3080	F 1	3224	E 1	7045	D 3		
2143	C 4	3097	E 2	3238	A 1	7050	E 2		
2160	D 1	3105	E 2	3240	A 1	7052	F 1		

SMD Assembly

View of solder side

BLACK Solder side

RED..... Components side

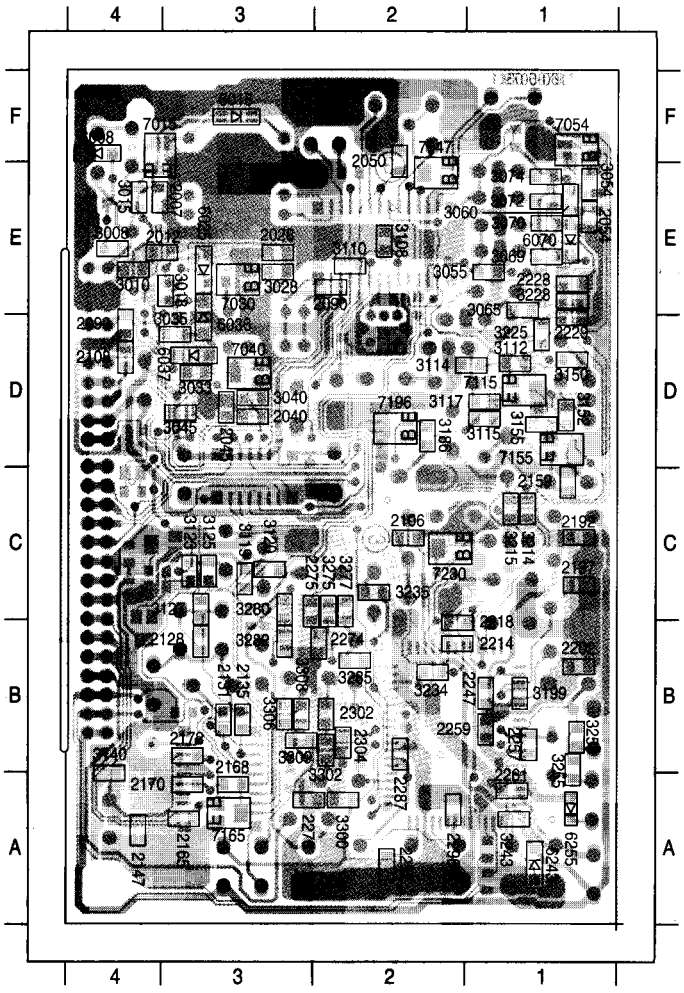

2007	E 4	2202	B 1	3033	D 3	3127	C 3	3302	B 2
2012	E 4	2214	B 2	3035	D 3	3140	B 4	3306	B 3
2028	E 3	2218	C 2	3040	D 3	3150	D 1	3308	B 3
2040	D 3	2228	E 1	3045	D 3	3152	D 1	3309	B 3
2045	D 3	2229	E 1	3054	E 1	3155	D 1	6008	F 4
2050	F 2	2247	B 1	3055	E 1	3186	D 2	6015	F 3
2054	E 1	2257	B 1	3060	E 1	3199	B 1	6025	E 3
2090	E 2	2259	B 1	3065	E 1	3214	C 1	6036	E 3
2099	D 4	2261	A 1	3069	E 1	3215	C 1	6037	D 3
2106	C 2	2270	A 3	3070	E 1	3225	D 1	6070	E 1
2108	D 4	2274	B 2	3072	E 1	3228	E 1	6243	A 1
2128	B 3	2275	C 3	3074	E 1	3234	B 2	6255	A 1
2131	B 3	2287	B 2	3108	E 2	3235	C 2	7015	F 4
2135	B 3	2292	A 2	3110	E 2	3243	A 1	7030	E 3
2147	A 4	2296	A 2	3112	D 1	3253	B 1	7040	D 3
2159	C 1	2302	B 2	3114	D 1	3255	B 1	7047	E 2
2165	A 3	2304	B 2	3115	D 1	3275	C 2	7054	F 1
2168	A 3	3008	E 4	3117	D 1	3277	C 2	7115	D 1
2170	A 3	3010	E 4	3119	C 3	3280	C 3	7155	D 1
2172	B 3	3015	E 4	3120	C 3	3282	B 3	7165	A 3
2192	C 1	3018	E 4	3123	C 3	3285	B 2	7196	D 2
2197	C 1	3028	E 3	3125	C 3	3300	A 2	7230	C 2

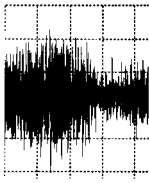

A: DC, 500mV/D
Connector 1624

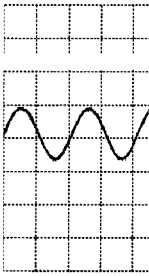

A: DC, 1 V/Div, 5
IC 7100 Pin 11/12

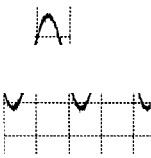

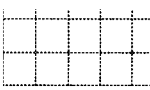

A: DC, 500mV/Di
Connector 1625

3-30

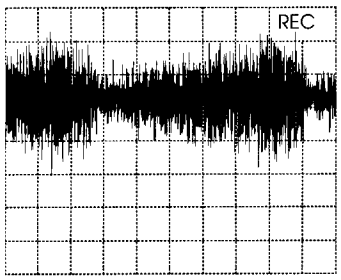

A: DC, 500mV/Div, 10us/Div
Connector 1624 Pin 10

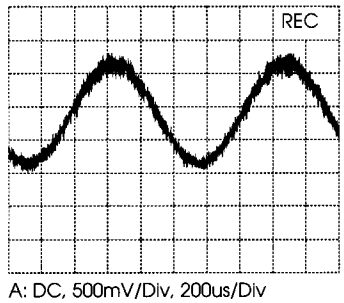

A: DC, 500mV/Div, 200us/Div
IC 7050 Pin 10

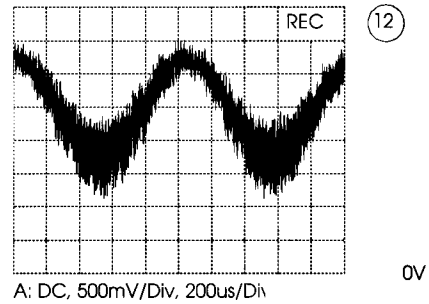

A: DC, 500mV/Div, 200us/Div
IC 7050 Pin 11

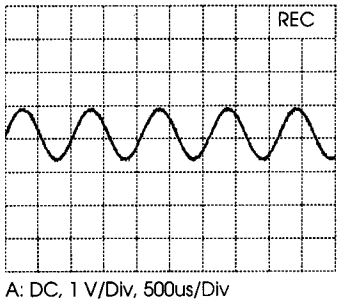

A: DC, 1 V/Div, 500us/Div
IC 7100 Pin 11/12

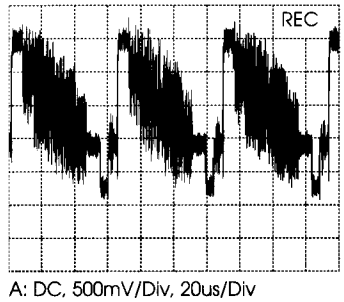

A: DC, 500mV/Div, 20us/Div
IC 7050 Pin 8

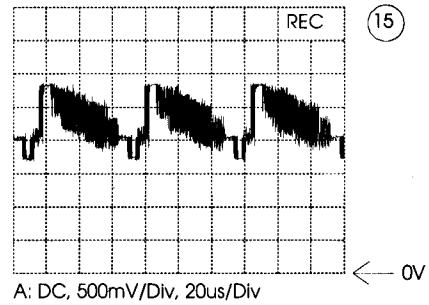

A: DC, 500mV/Div, 20us/Div
Connector 1624 Pin 5

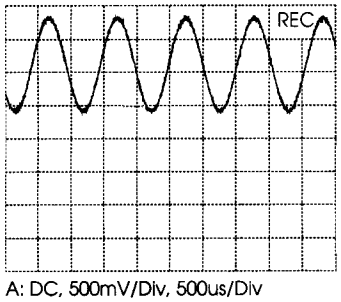

A: DC, 500mV/Div, 500us/Div
Connector 1625 Pin 9

4. DRIVE ASSEMBLY

This tape deck has three motors; one providing precision drive for the scanner unit; the second providing direct drive for the capstan and belt drive for the reel tables; the third motor drives the lift and tape threading/dethreading operations.

Special features are:

Quick start
Short winding time
Automatic cleaning of video heads by cleaning roller

To obtain a high repair standard we have developped a range of service kit's. These kit's covers the spare parts which are engaged together.
The tape deck's sensors are located on the motherboard underneath the tape deck, and included in its circuitry, lay out and parts list.

4.1 Deck parts replacement

The procedure for the removal and refitting of the following parts is described; only the lift, the scanner, the capstan motor and the A/C head are fixed by screws.
All the other deck assembly parts are held only by snap hooks.

For the replacement of parts on the underside of the tape deck, remove the tape deck from the motherboard.

Manual extraction of cassette:
If, after the Eject button has been pressed, the drive does not unthread and eject the cassette, the dethreading/eject operation can also be carried out manually by turning the wheel at the rear of the threading motor.

fig. 1

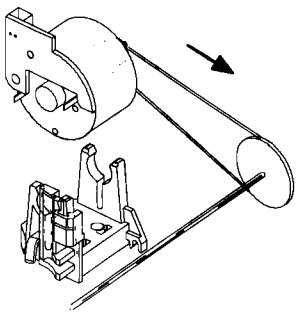

IMPORTANT:
After each repair has been carried out in the drive assembly, the first operation after repairing must be to bring the cassette compartment into „eject" position by hand.

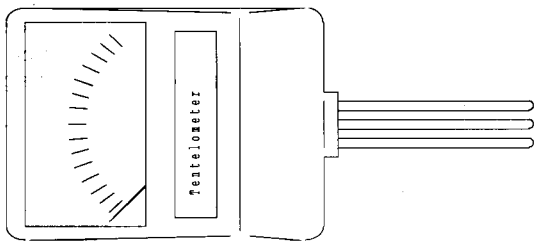

Tentelometer 4822 395 90584

Tool for tapetension adjustment 4822 395 50188

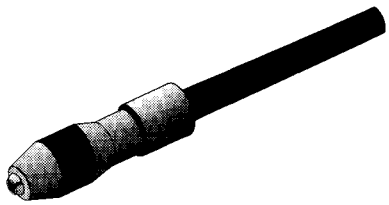

Handle 4822 256 90493

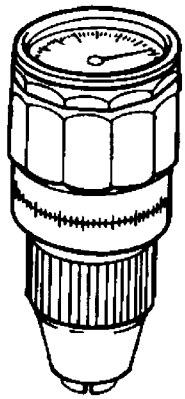

Torquemeter:
600 gf-cm 4822 395 90232
90 gf-cm 4822395 80196

Auxiliary tools for deck adjustment:

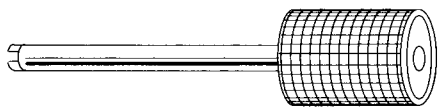

Post adjustment screwdriver 4822 395 50275

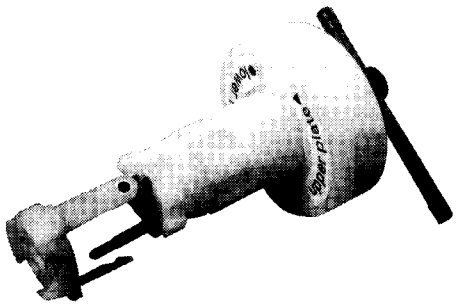

Tool for removing the head disc 4822 395 90977

Testcassette 4822 397 30103

Nylon gloves 5322 395 94022

4.1.1 Deck lay out diagram

Deck in position „threaded out".

The following diagrams indicate the relative position of the gearwheels and levers when the deck is in the threaded out (cassette-compartment down) position.

Top view

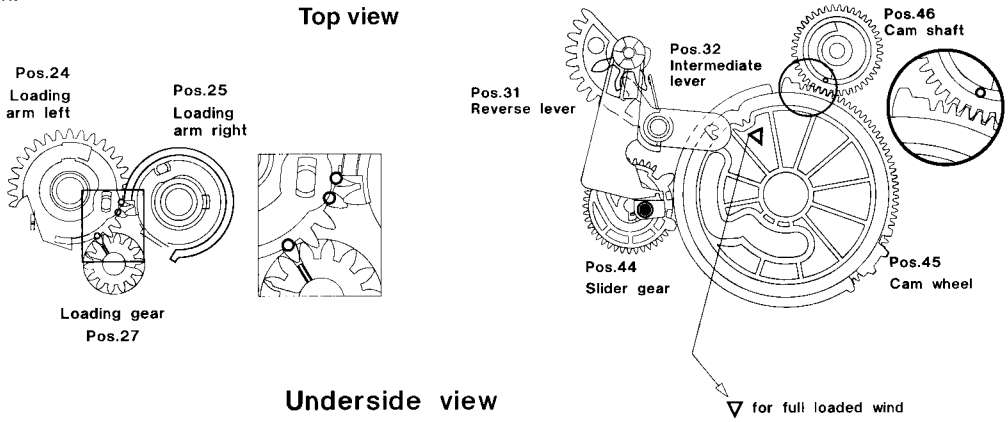

Underside view

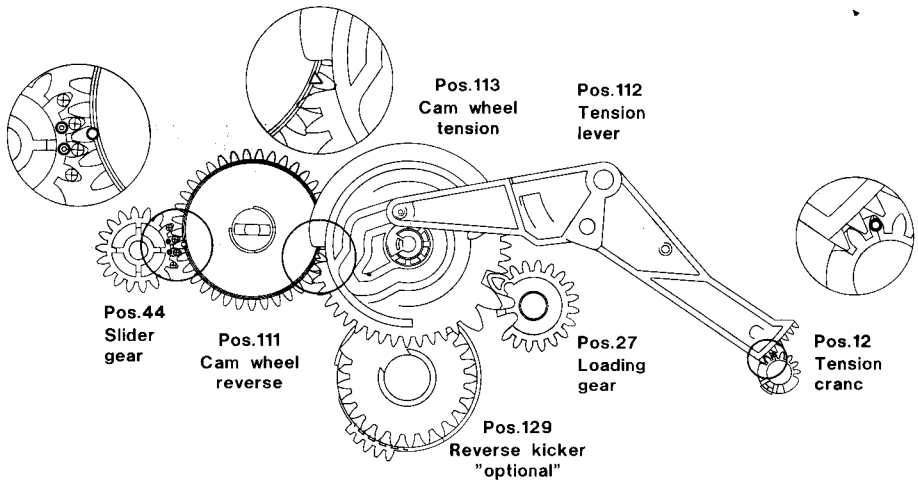

4.1.2 The Lift

Refitting the lift compartment:
Ensure the lift compartment is down and gear A is rotated one click stop anticlockwise from the down position.
The removal and refitting of the lift can be carried out in all deck positions with the exception of „eject" (ensure that gears 103/105 are free).

To remove the lift:
Free the holding bracket (Fig. 2) by rotating it up and back from the upper end.
Unscrew the 4 screws on the underside of the deck.
Carefully remove the lift vertically, noting the position of the record protect operating lever.

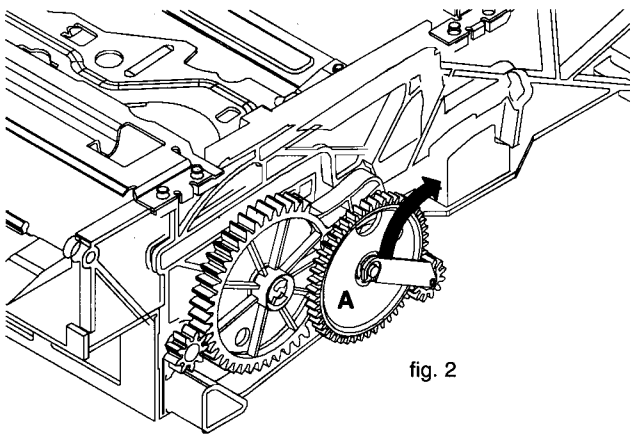

fig. 2

4.1.3 Head disc replacement

Removal :

Nylon gloves should be worn when handling the head disc.
Turn the headdisc until the long hole of the rotor appears in the bigger hole of the scannermotor
Insert the reference pin C (included with each service head disc) through the bigger hole of the lid of the scanner motor until the pin snaps in the long hole of the rotor. (Fig. 3)

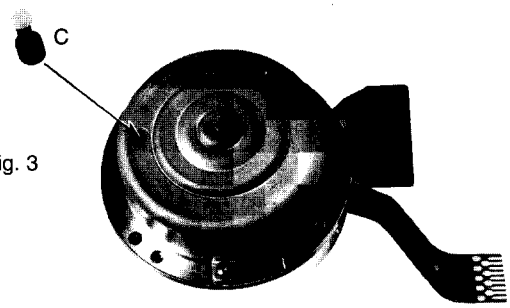

fig. 3

Important:

Choose Installation/Removal of the upper/lower clamping element by turning and attaching the reference element to the tool. (Fig. 4)

fig. 4

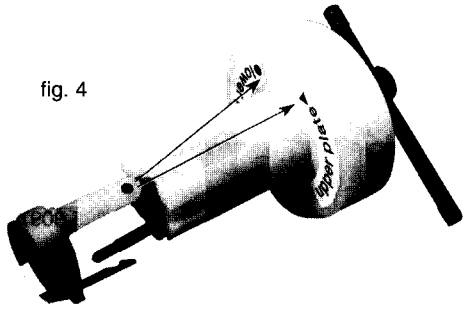

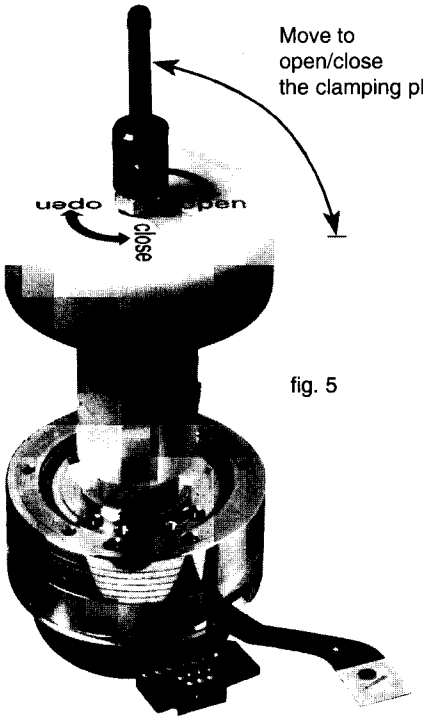

fig. 5

Position the tool on the upper clamping element, loosen the clamping element by turning the lever 90 degrees and remove it from the head disc. (Fig. 5)

Prepare the tool for the lower clamping element.Position the tool on the head disc and make sure that all 3 pins are snapped in the the lower clamping element. Loosen the clamping element by turning the lever 90 degrees and remove the head disc plus the tool from the scanner spindle. (Fig.6)

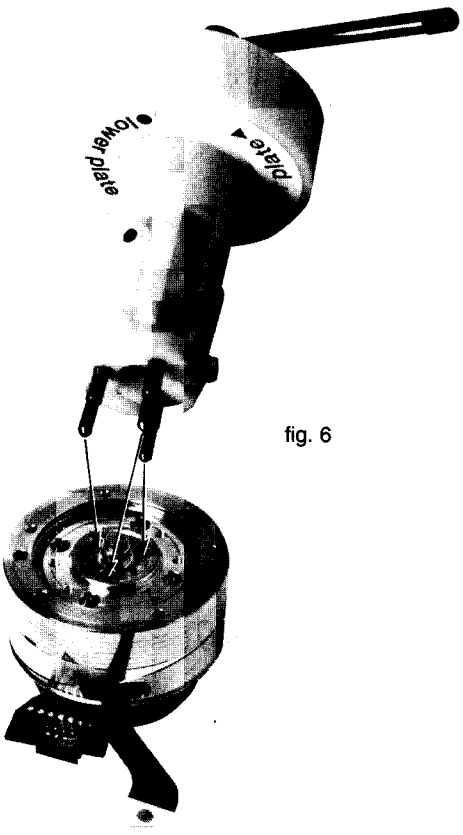

fig. 6

Installation:
Before carrying out the installation of the new head disc make sure that the scanner motor spindle is clean and undamaged. (The spindle has to be free of grease and must not be touched with bare hands)
Insert the 2 Mylar foils (included with each head disc) in the head disc. (Fig.7)

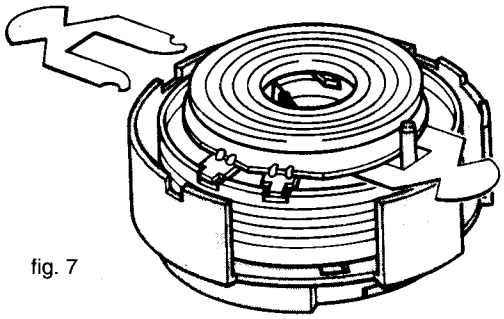

fig. 7

Position the tool (reference: lower clamping element) on the new headdisc (with protective cover) and loosen the lower clamping element.
Position the head disc so that pin D of the protective cover engages in the hole of the stator (the arrow on the protective cover must point towards the scanner print). (Fig. 8)

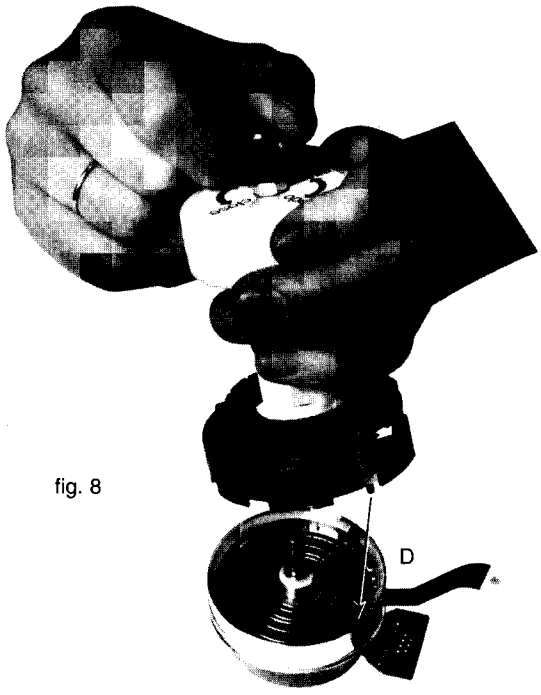

fig. 8

Reach the exact position through pressing the tool down with a force of 1 N. and fix the lower clamping element by turning the lever towards „close".
Remove the tool.
Change the tool to „upper clamping element" and position the clamping element exactly. (Fig. 9)

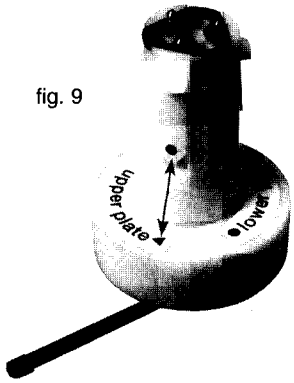

fig. 9

Tighten the clamping element through turning the lever towards „open". Position the tool planely on the head disc and fix the clamping element. (Fig.5 „close")
Remove the protecting cap from the head disc, withdraw the two Mylar foils and remove the reference pin C.

After replacing the head disc, carry out the following adjustments and checks :
Head switching pulse (gap position, chapter 3)
Write current adjustments (chapter 3)
Check tape path alignment (see paragraph 4.2.1.)

4.1.4 A/C Head (Combi head) (Pos. 36)

Remove the fixing spring (A) (fig. 10)
Remove the fixing screw and replace the A/C head.
Use a new fixing spring (included with new A/Chead) for reassembly.

After the A/C head has been replaced, all adjustments described in paragraph 4.2.1.2 and paragraph 4.2.2 have to be carried out.

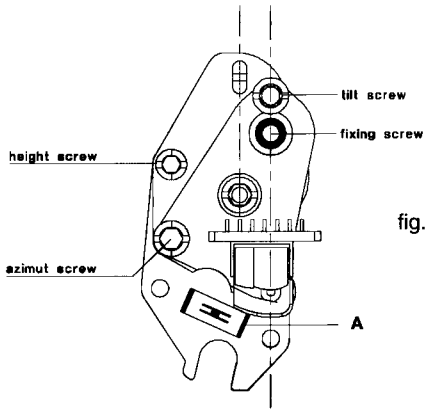

fig. 10

4.1.5 Threading motor (Pos. 38)

Remove the belt and disconnect the connector plug.
Remove the threading motor from the motor supports (Fig. 11).

During reassembly ensure that the threading motor is correctly located in the front and rear supports.

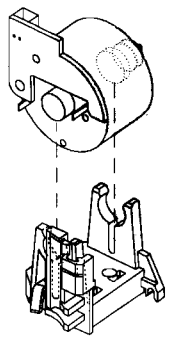

fig. 11

4.1.6 Capstan motor (Pos. 127)

Remove the tape deck.
Remove the belt (pos.126) on the underside;
Remove the three capstan motor fixing screws (Fig. 12) and withdraw the capstan motor downward from the drive assy.
The reassembly is carried out in reverse order. Make sure that the capstan is free of grease.

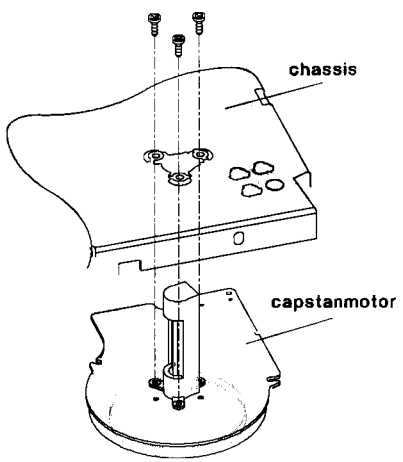

fig. 12

4.1.7 Pressure roller (Pos. 37)

Remove the tape deck
Unhook and remove the pressure roller tension spring.
Release the pressure roller guide (pos. 41) from the guide in the threading motor holder by pressing the top of the motor guide rearwards and rotating the pressure roller guide assembly clockwise by approximately a quarter of a turn (Fig. 13) The pressure roller and guide can now be lifted clear.

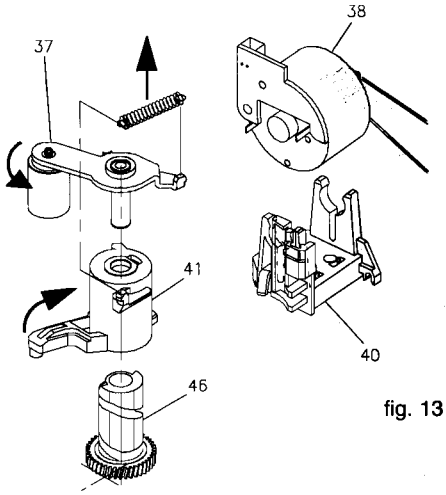

fig. 13

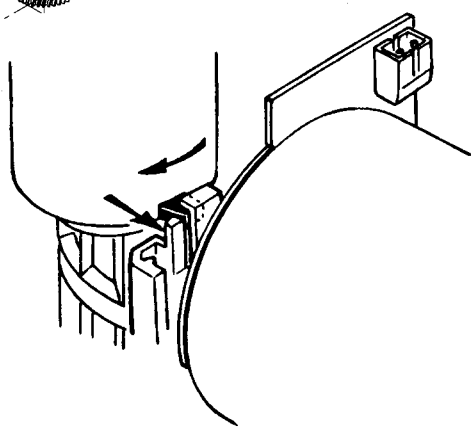

Ensure that no grease from the pressure roller guide gets to the capstan or pressure roller.
The reassembly is carried out in reverse order.

4.1.8 Roller unit right (Pos. 26)

Remove the tape deck.
Compress the two snap hooks by means of a pair of tweezers and remove the roller assy from the roller unit right (Fig. 14).
Unhinge the loading arm right from the holding plate and push the latter towards the front of the deck to remove from the guide (right).

NOTE: During reassembly ensure the link from 25 is engaged in the hole of the holder plate 26.
After replacing the roller unit (right), the tape path has to be checked, and adjusted if necessary (paragraph 4.2.1).

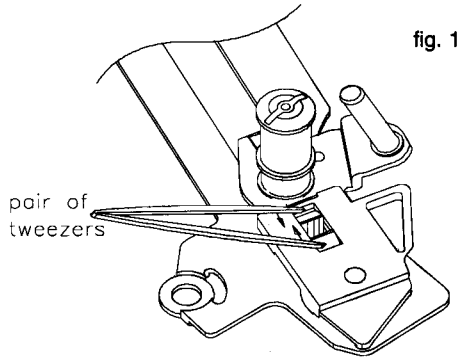

fig. 10

4.1.9 Roller unit left (Pos.23)

Set the drive assy to „Eject" position.
Unhook the tension arm spring (pos. 11), to avoid the tension arm spring being pre-loaded.
At the bottom side of the drive assy remove the tension lever (pos.112).
Compress the two snap hooks by means of a pair of tweezers (Fig. 9)and remove the roller assy (A) from the plate (B).
Unhinge the loading arm (left) from the holding plate and remove the latter downward from the drive assy through the recess in the chassis (Fig. 15).
The reassembly is carried out in reverse order.

NOTE : During reassembly
1. Place the carriage holding plate in the assembly with the half-round cutout nearest the rear of the deck.
2. When the loading arm is refitted ensure the pin on the underside of 23 is through the link of 24B.

After replacing the roller unit (left) the tape path has to be checked (paragraph 4.2.1.), and adjusted if necessary.

fig. 15

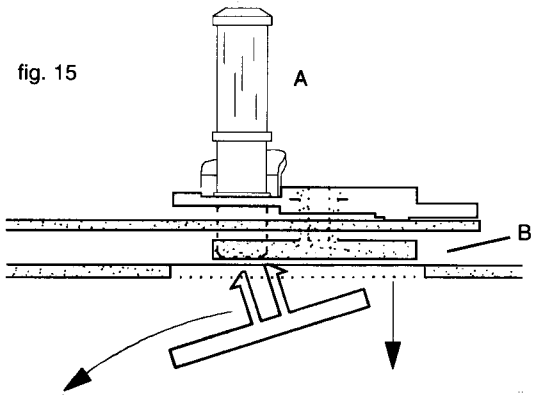

4.2 Adjustments

4.2.1 Tape path

fig. 17

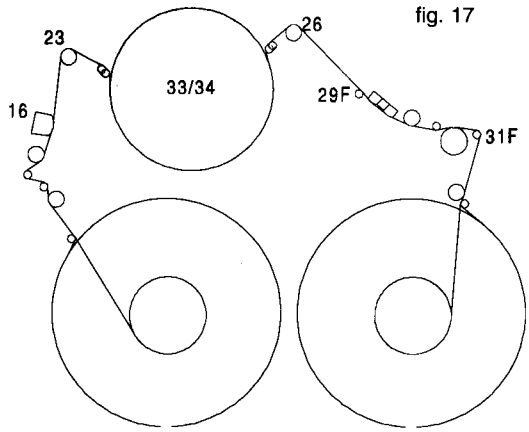

4.2.1.1 Roller left unit/roller unit right

Preparation:
Connect one input of a dual trace oscilloscope to observe the tape sync pulse CTL. The other input (DC coupled) to observe the tracking information TRIV.
Trigger the oscilloscope externally on the head pulse HP1.
Playback the black and white section of the alignment test tape.
Set the deck in the condition where the video heads are running along the upper edge of the tracks only by:

1. Call the service test program (chapter 2.1)
2. Activate manual tracking (service test program step 03) and watch the tape sync pulse move to the left in relation to the TRIV signal.
3. Note the extreme left hand position reached by the sync pulse, repeat as necessary.
4. Stop the movement of the pulse when the TRIV signal reduces to 1/2 to 2/3 maximum amplitude by pressing the normal play button. A noisy picture (disturbances) is visible on the TV set and the CTL pulse should be to the left of the display.
The recorder will hold this position until the service test progam step 03 is left.
This condition works only if X-distance is adjusted.

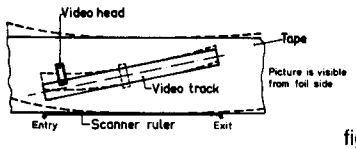

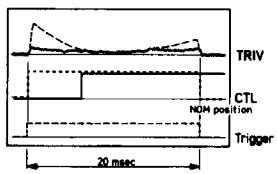

fig. 18

Adjustment:
Adjust the left and right roller units to make the tracking signal TRIV straight and flat as possible (Fig. 18).

4.2.1.2 A/C Combi head

Tilt angle adjustment

Set the drive to feature mode (e.g. +7)
Adjustment :
By means of the tilt angle adjusting screw move the tape until the lower edge just touches the tape guide A1 (see Fig. 19) the tape must not be distorted at the lower edge (by pressing onto guide).

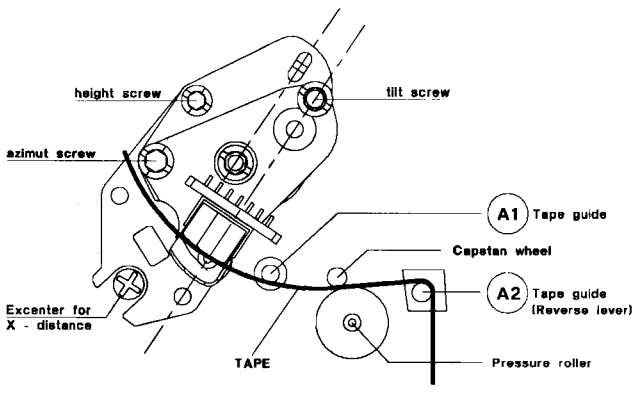

fig.19

Adjustment of the azimuth angle and the head height

Connect an oscilloscope to the linear Audio output.
Play the section of the test cassette with the audio signal 400 Hz.
Adjust for maximum output voltage by means of the height adjustment screw
Play the section of the test cassette with the audio signal 8 kHz.
Adjust to maximum output voltage by means of the azimuth adjustment screw (Fig. 19).
If necessary, repeat this procedure
Check the tilt angle adjustment

If the tape path was completely out of adjustment or if several components in the tape path have been replaced, it is possible, that the adjustments described in paragraph 4.2.1.1 and paragraph 4.2.1.2 have to be repeated several times.

4.2.2 Adjustment of the horizontal distance (x-distance)

Before this adjustment is carried out, insert the test cassette (start from Eject position). Call the service test program (tracking value will take up its nominal position) and press the „play" button.
Playback the black/white part of the test cassette.)
Display the TRIV signal on an oscilloscope (DC-coupled) and adjust for maximum voltage by means of the excentric screw (Fig.19).

4.2.3 Brake band and tape tension

Due to further development it is no longer necessary to make theseadjustments after replacement of the brake band.
If the brake band or tape tension are completely misadjusted, set them to a center position; set the drive to „play" and adjust the brake band until the edge of the elbow of the tape tension arm is aligned with the left inner edge of the left guide (fig. 20).

4.2.4 Friction clutch control check

Set the drive to „Play" position.
Place the torquemeter on the right reel.
Turn the capstan motor to move the right reel clockwise.
Keep turning, until the indication at the torquemeter no longer changes (Fig. 21)
The torque has to be 10,5 mNm +/-25% (105gFcm +/-25%)

4.2.5 Reverse brake control

Set the drive to „Reverse" position.
Place a torquemeter on the right reel and turn the latter counterclockwise, until the reel just starts to flip.
The value indicated at the torquemeter has to be 7mNm +/-3mNm (70 gFcm +/-30gFcm) (Fig. 21).

fig. 20

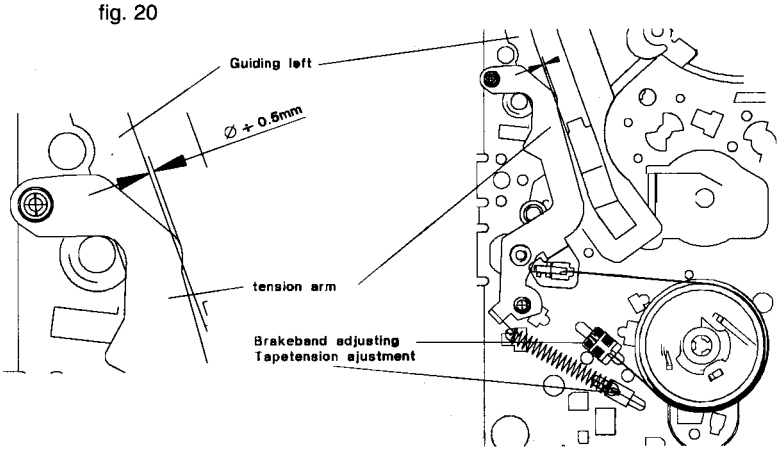

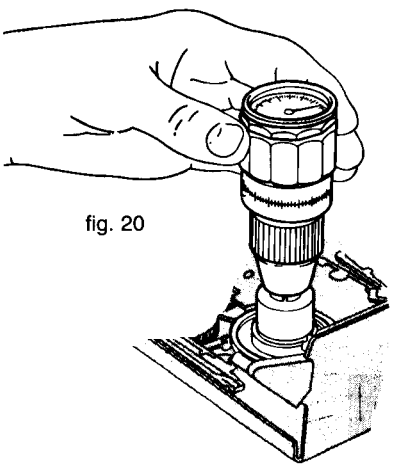

fig. 20

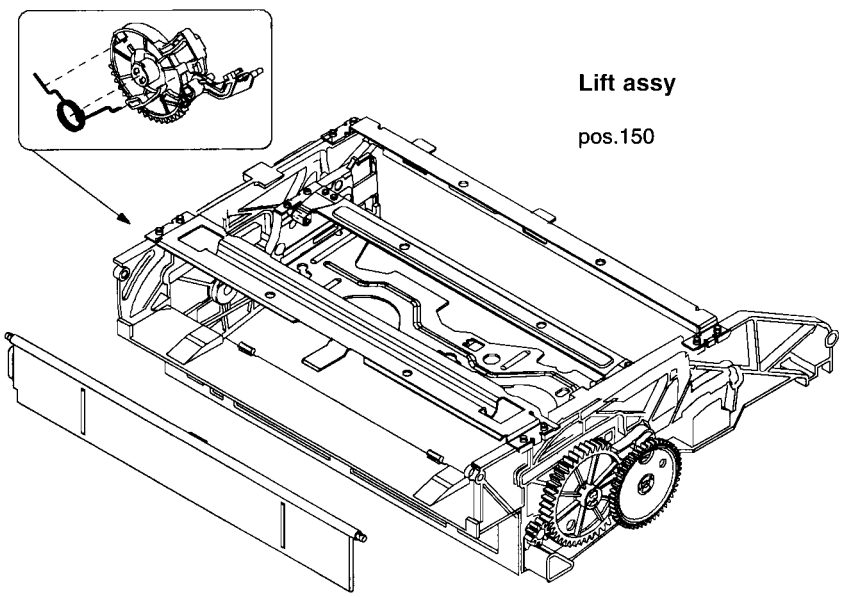

Lift assy

pos.150

In order to make the replacement of the deck parts easier, the snap hooks are marked with an arrow

TOP VIEW

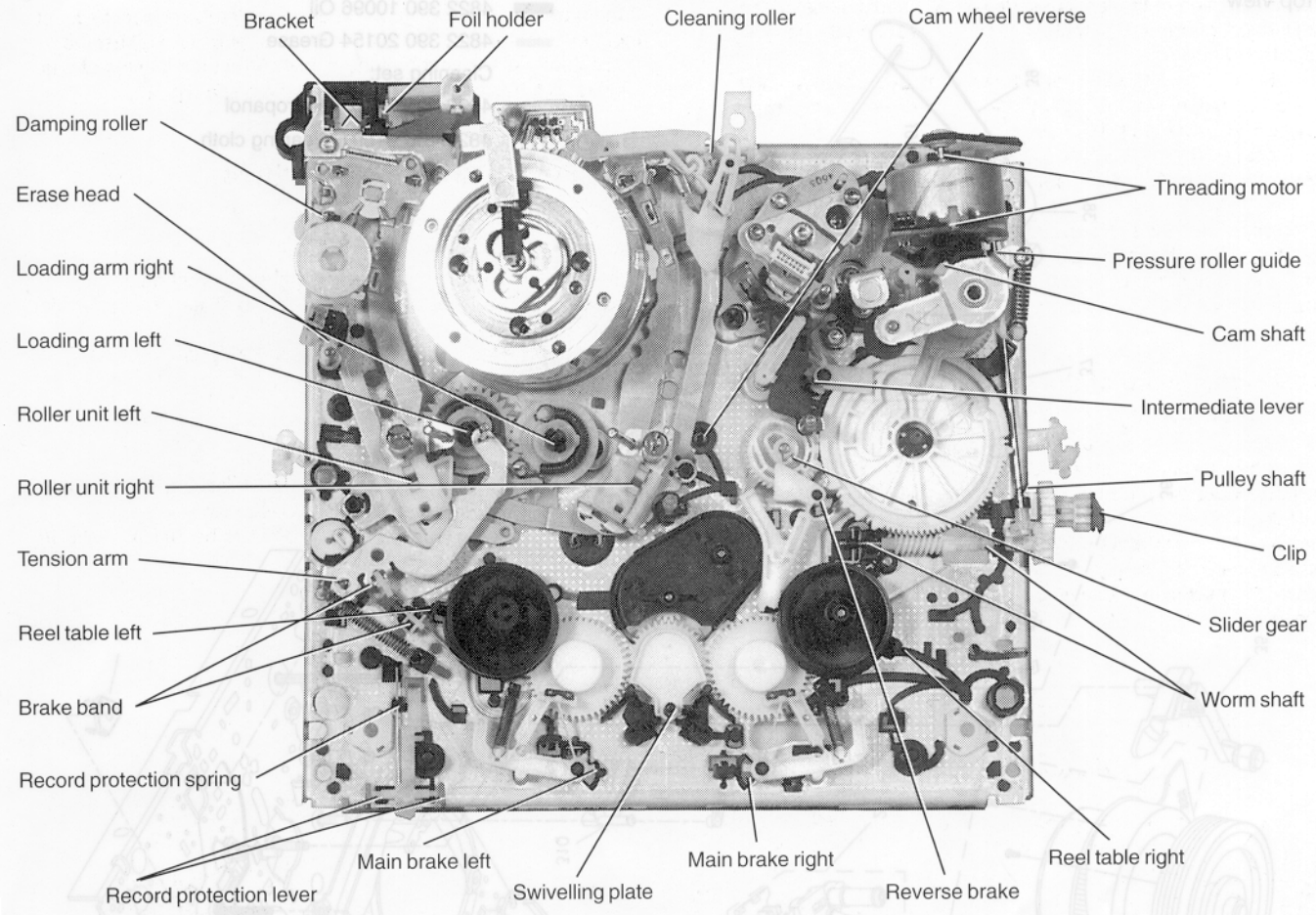

UNDERSIDE VIEW

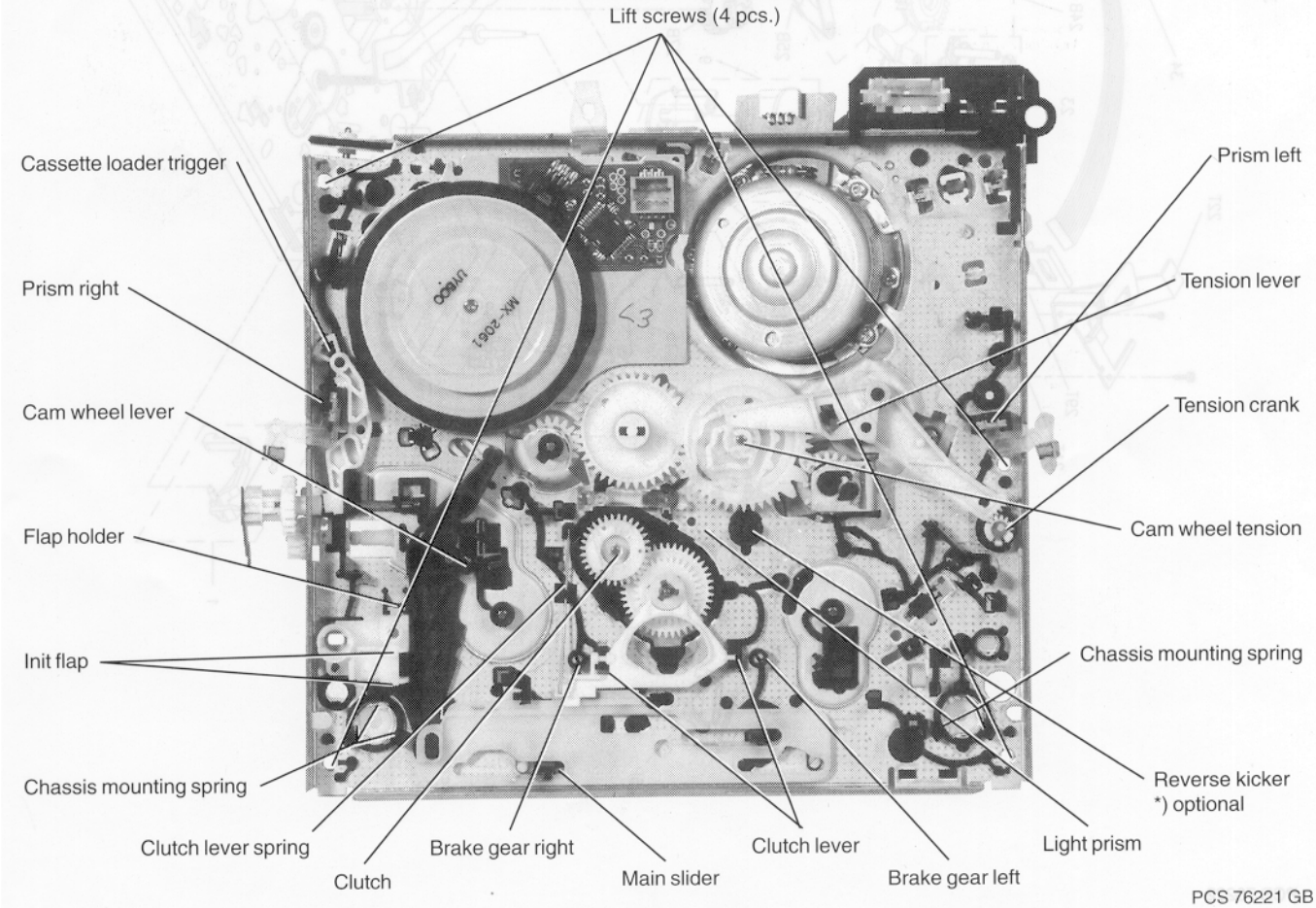

4.3 Exploded view

Top view

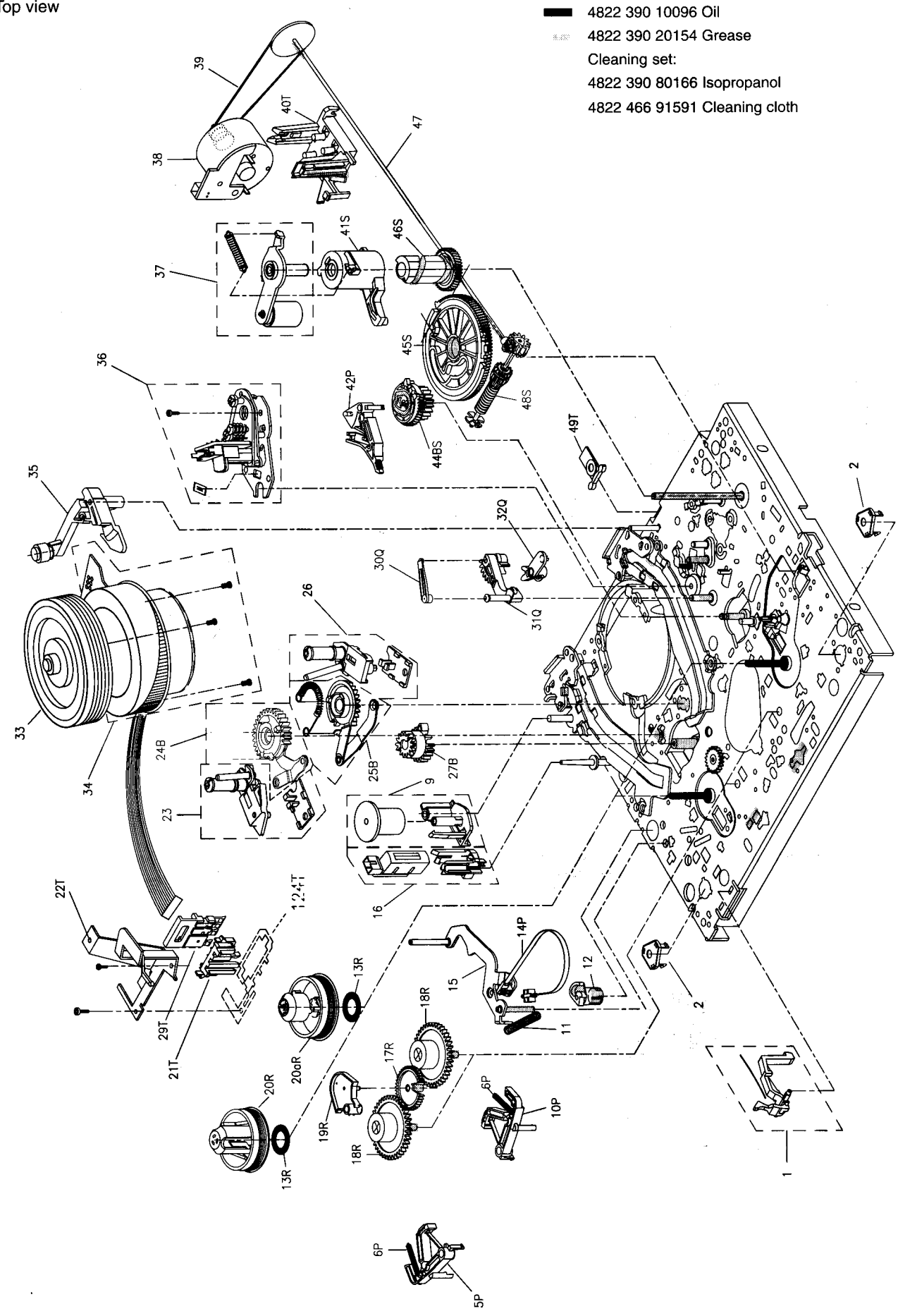

Underside viw

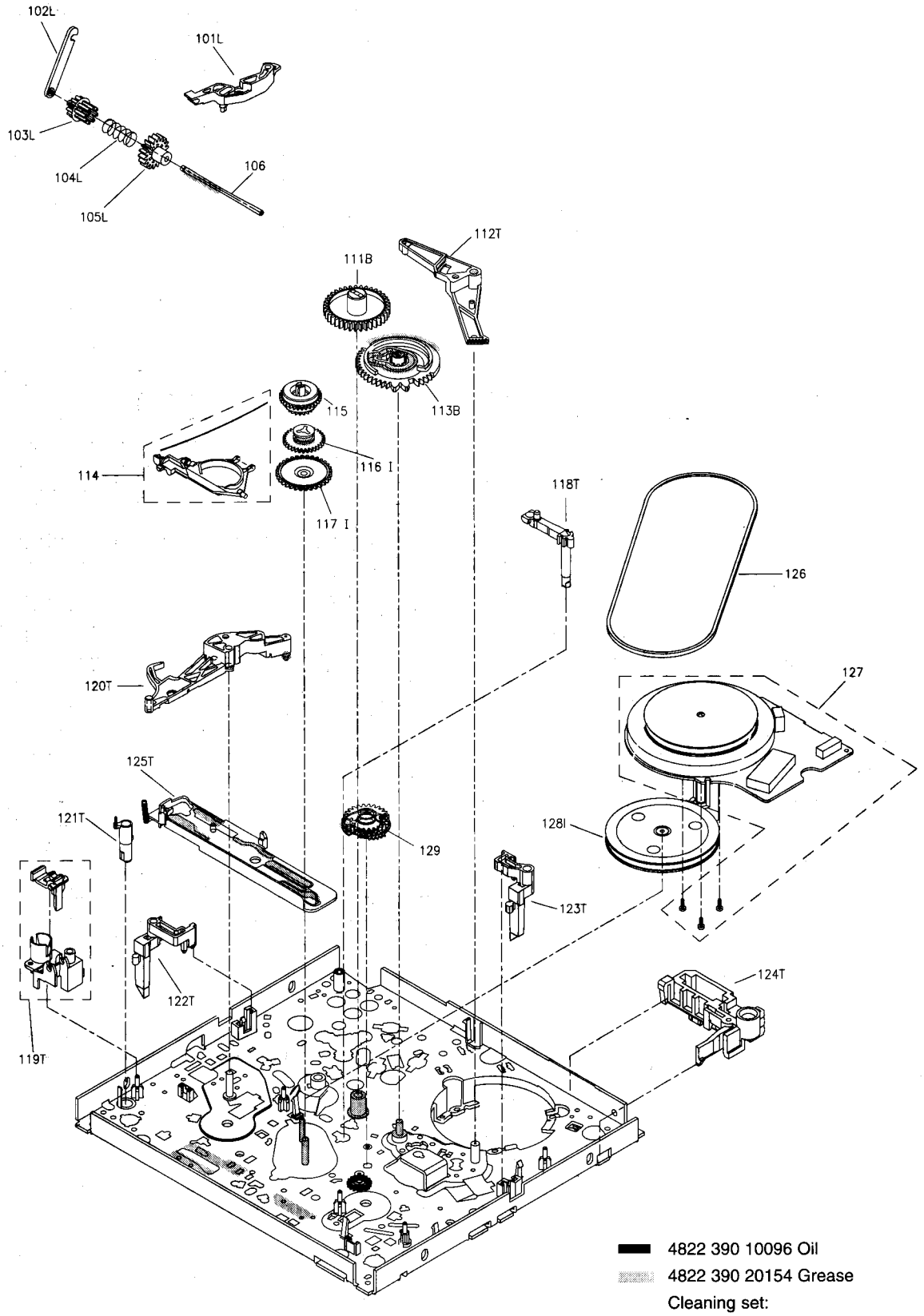

4822 390 10096 Oil
4822 390 20154 Grease
Cleaning set:
4822 390 80166 Isopropanol
4822 466 91591 Cleaning cloth

MECHANICAL PARTS LIST

Pos.	Description	KITS								Code number 4822
		B	I	L	P	Q	R	S	T	
1	Rec. protection lever (with spring)									402 10202
2	Chassis mounting spring (2x)									492 71022
5	Main brake left				P					
6	Main brake spring (2x)				P					
9	Damping roller									528 70782
10	Main brake right				P					
11	Tension arm spring									492 33317
12	Tension crank									403 70551
13	Slip ring						R			
14	Tension band				P					
15	Tension arm									403 70547
16	Erase head									249 10522
17	Swivelling gear						R			
18	Brake gear (2x)						R			
19	Swivelling plate						R			
20	Reel table (S)						R			
20a	Reel table (T)						R			
21	Foil holder								T	
22	Bracket								T	
23	Roller unit left									528 70771
24	Loading arm left	B								
25	Loading arm right	B								
26	Roller unit right									528 70772
27	Loading gear	B								
29	Plate								T	
30	Reverse clip					Q				
31	Reverse lever					Q				
32	Intermediate lever					Q				
33	Head disc 4/2									691 10548
33	Head disc 4/2-Secam									691 10551
33	Head disc 4/2/1									691 10548
33	Head disc 4/2/1-Secam									691 10551
33	Head disc 4/2-S-VHS									691 10522
33	Head disc 4/2/1-S-VHS									691 10552
34	Scanner motor 4/2 (with screws)									361 10901
34	Scanner motor 4/2/1 (with screws)									361 10902
35	Cleaning roller									528 70773
36	A/C Head (with clip and screws)									249 10468
37	Pressure roller (with spring)									528 70774
38	Threading motor									361 10809
39	Threading belt									358 20421
40	Motor holder								T	
41	Pressure roller guide							S		
42	Reverse brake				P					
44	Slider gear	B						S		
45	Cam wheel							S		
46	Cam shaft							S		
47	Pulley shaft									528 81462
48	Worm shaft							S		
49	Chassis mounting clip								T	

Pos.	Description	KITS								Code number 4822
		B	I	L	P	Q	R	S	T	
101	Cassette loader trigger			L						
102	Clip			L						
103	Cassette loader gear1			L						
104	Cassette loader spring			L						
105	Cassette loader gear2			L						
106	Spindle									535 93277
111	Cam wheel reverse	B								
112	Tension lever								T	
113	Cam wheel tension	B								
114	Clutch lever (with spring)									403 70549
115	Clutch									528 20736
116	Changing gear		I							
117	Double gear		I							
118	Light prism								T	
119	Init flap and holder								T	
120	Cam wheel lever								T	
121	S-VHS lever								T	
122	Prism rihgt								T	
123	Prism left								T	
124	Holder								T	
125	Main slider								T	
126	Driving belt									358 31166
127	Capstan motor (with screws)									361 10805
129	Reverse kicker with transmission gears *)									522 20451
128	Gear pulley		I							
140	Flex cable									320 40287
150	Lift									443 64112
KIT	B									310 31955
KIT	I									310 31963
KIT	L									310 32116
KIT	P									310 32191
KIT	Q									310 10658
KIT	R									310 10659
KIT	S									310 10661
KIT	T									310 10662

*) optional

Um eine hohen Reparaturstandard zu gewährleisten sind mit Ausnahme von Kit T immer alle im Kit enthaltenen Teile zu tauschen.

In order to guarantee a high repairstandard all spare parts included in a kit have to be replaced with the exception of kit T.

Per una riparazione garantita ocorre sostituire tutti i pezzi contenuti nei kit, fatta eccetione per il kit T.

Para obtener un estandár de reparaciones elevado,es necesario cambiar todas las partes contenidas en el kit, la única exceptión es para el kit T.

A fin d'obtenir un standard de réparations élevé, toutes les pièces de rechange incluses dans un kit sont à remplacer, exception faite du kit T.

Om een hoge reparatiekwaliteit te waarbogen moeten, met uitzondering van kit T, altijd alle zich in een kit bevindende onderdelen worden vervangen.

Exploded View of the set

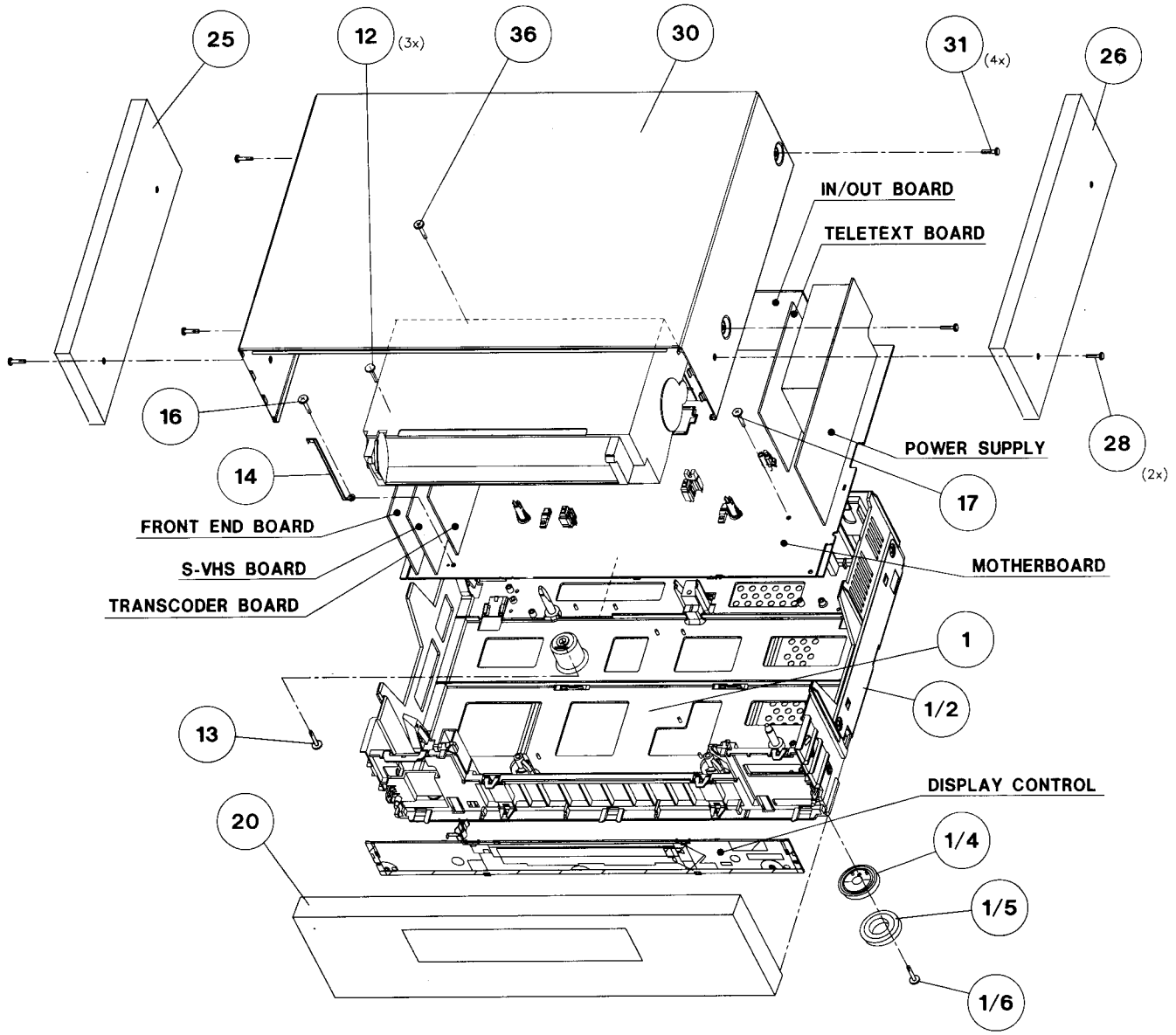

Set Parts List

Pos	Service Code	Description
1	4822 464 10175	FRAME ASSY VR969
1	4822 464 10172	FRAME ASSY VR768
1	4822 464 10178	FRAME ASSY VR967
1/2	4822 442 00278	BOTTOM
1/4	4822 462 10772	FOOT VR969
1/4	4822 462 10771	FOOT VR967
1/5	4822 462 10773	FOOT INLAY VR969
1/6	4822 502 14115	SCREW 3,15X8 ZN GEC
12	4822 502 13884	PLAST.SCREW 3,5X16
13	4822 502 14107	CONTACT CHASSIS SCREW
14	4822 256 10249	PCB-HOLDER TO S-VHS-BOARD
15	4822 256 10249	PCB-HOLDER TO VPT-BOARD
16	4822 502 21349	SCREW 3,15X10 ZN GEC Z R
17	4822 502 14115	SCREW 3,15X8 ZN GEC Z R
25	4822 426 10202	SIDE PANEL LEFT VR969
25	4822 426 10205	SIDE PANEL LEFT VR967
26	4822 426 10203	SIDE PANEL RIGHT VR969
26	4822 426 10206	SIDE PANEL RIGHT VR967
28	4822 502 14315	SCREW M3X12 TAPT SWC Z R
30	4822 442 00421	COVER VR969
30	4822 442 00422	COVER VR768
30	4822 442 00426	COVER VR666, VR668
30	4822 442 00429	COVER VR967
31	4822 502 14109	PLAST. SCREW 3,5X10 BK R
36	4822 502 21545	SCREW 2.5X4 TAPT. T8
150/1	4822 321 10249	MAINS CORD
150/1	4822 321 10886	MAINS CORD (+FUSE) for UK
150/2	4822 320 50377	CONNECTING CABLE PAL
150/3	4822 321 62402	S-VHS CABLE
150/4	4822 321 63006	SCART CABLE (WITH PIN10)
9501	4822 320 11498	FFC ASSY 6 POL.(TD-1501)
9503	4822 320 11483	FLAT FLEX CABLE SCR 7 POL
9508	4822 320 11484	FLAT FLEX CABLE 3 POL
9510	4822 320 11499	FLAT FLEX CABLE 19 POL
9516	4822 320 11501	FLAT FLEX CABLE 10 POL
9526	4822 320 11485	FLAT FLEX CABLE 18 POL
9538	4822 265 10637	RS 232 SOCKET ASSY
	4822 310 10748	Extension Adapter S-VHS Board

Front Panels

Pos	Service Code	Description
20/1	4822 459 04217	FRONT PANEL VR666/02
20/1	4822 459 04216	FRONT PANEL VR666/16
20/1	4822 459 04214	FRONT PANEL VR666/39
20/1	4822 459 04218	FRONT PANEL VR668/02
20/1	4822 459 04219	FRONT PANEL VR668/05
20/1	4822 459 04221	FRONT PANEL VR668/06/16
20/1	4822 459 04209	FRONT PANEL VR668/39
20/1	4822 459 04215	FRONT PANEL VR768/02
20/1	4822 459 04206	FRONT PANEL VR768/05
20/1	4822 459 04205	FRONT PANEL VR768/16/59
20/1	4822 459 04199	FRONT PANEL VR768/39
20/1	4822 459 04208	FRONT PANEL VR967/02
20/1	4822 459 04207	FRONT PANEL VR967/16/58
20/1	4822 459 04204	FRONT PANEL VR967/39
20/1	4822 459 04222	FRONT PANEL VR969/02
20/1	4822 459 04223	FRONT PANEL VR969/05/16/58
20/1	4822 459 04202	FRONT PANEL VR969/39

Front Panel VR666

Pos	Service Code	Description
20/1/6	4822 443 10357	LIFT FLAP VR666/39
20/1/6	4822 443 10356	LIFT FLAP VR666/02/16
20/1/7	4822 492 70896	LEG SPRING LIFT FLAP
20/3	4822 502 11839	PLAST.SCREW 2,9X8 VR666, VR668
20/10	4822 277 11576	DECK CONTROL UNIT VR666
20/11	4822 502 11839	PLAST.SCREW 2,9X8 VR666, VR668

Front Panel VR668

Pos	Service Code	Description
20/1/6	4822 443 10358	LIFT FLAP VR668/39
20/1/6	4822 443 10359	LIFT FLAP VR668/02/05/06/16
20/1/7	4822 492 70896	LEG SPRING LIFT FLAP
20/1/12	4822 443 10361	FLAP VR668
20/3	4822 502 11839	PLAST.SCREW 2,9X8 VR666, VR668
20/10	4822 277 11576	DECK CONTROL UNIT VR668
20/11	4822 502 11839	PLAST.SCREW 2,9X8 VR666, VR668

Front Panel VR768

Pos	Service Code	Description
20/5	4822 442 00423	FLAP VR768
20/6	4822 443 10339	LIFT FLAP VR768/02/05/16/59
20/6	4822 443 10331	LIFT FLAP VR768/39
20/7	4822 410 10565	KNOB JOG VR768
20/8	4822 492 70896	LEG SPRING LIFT FLAP
20/9	4822 410 10566	BUTTON SET TOP ASSY VR768
20/10	4822 410 10567	KNOB SHUTTLE ASSY VR768
20/11	4822 502 13886	SCR PAN TORX ST ZN BK 2X6 VR768
20/12	4822 502 30685	SCR PAN TORX ST ZN BK 2X8 VR768
20/13	4822 320 11482	FLAT FLEX CABLE 19 P VR768

Front Panel VR967

Pos	Service Code	Description
20/5	4822 443 10347	LIFT FLAP VR967
20/6	4822 442 00427	FLAP VR967
20/7	4822 442 00428	CORNER PIECE L/R VR967
20/8	4822 492 70896	LEG SPRING LIFT FLAP
20/9	4822 502 30685	SCR PAN TORX ST ZN BK 2X8 VR967
20/10	4822 502 30408	SCR PAN TORX ST ZN BK3X10 VR967

Exploded View Front Panel VR969 (Pos. 20)

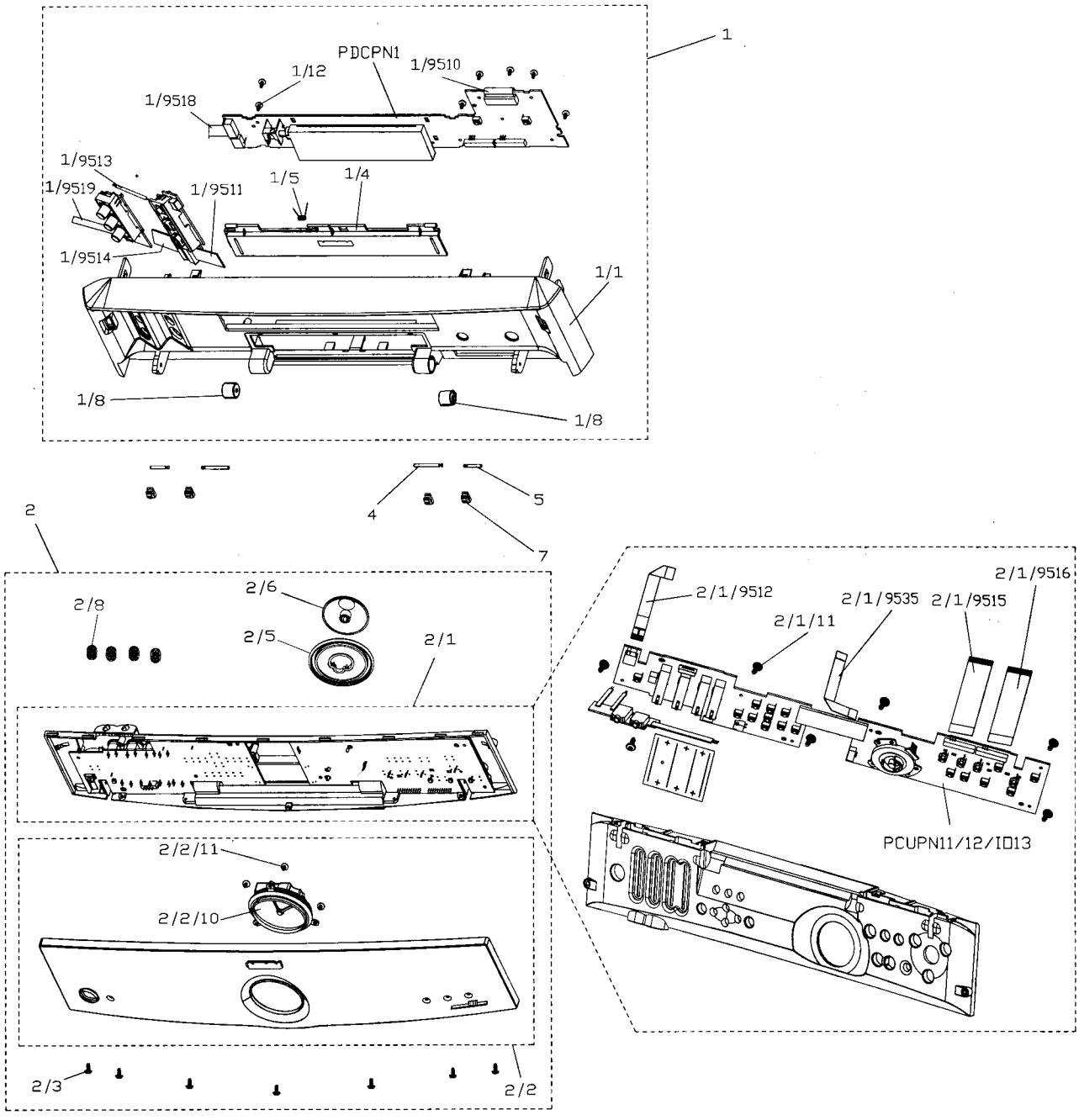

Pos	Service Code	Description
20/1/4	4822 443 10365	LIFT FLAP VR969
20/1/5	4822 492 70896	LEG SPRING LIFT FLAP
20/1/8	4822 529 10368	DAMPER ASSY VR969
20/1/9510	4822 320 11499	FLAT FLEX CABLE 19POL VR969
20/2/1	4822 443 10336	FLAP INSIDE ASSY VR969/39
20/2/1	4822 443 10362	FLAP INSIDE ASSY VR969/02/05/16/58
20/2/1/11	4822 502 14317	SCREW 2,35X6 ZN SWC ZR VR969
20/2/1/9512	4822 320 11517	FLAT FLEX CABLE SCR 7 POL VR969
20/2/1/9515	4822 320 11518	FLAT FLEX CABLE 20 POL VR969
20/2/1/9516	4822 320 11518	FLAT FLEX CABLE 20 POL VR969
20/2/1/9535	4822 320 11519	FLAT FLEX CABLE 8 POL VR969
20/2/2	4822 443 10366	FLAP OUTSIDE ASS.VR969/39
20/2/2	4822 443 10363	FLAP OUTSIDE ASS.VR969/02/16/58
20/2/2	4822 443 10369	FLAP OUTSIDE ASS.VR969/05
20/2/2/10	4822 344 14001	ANALOG CLOCK W735 (JUNGH) VR969
20/2/2/11	4822 502 14317	SCREW 2,35X6 ZN SWC ZR VR969
20/2/3	4822 502 14317	SCREW 2,35X6 ZN SWC ZR VR969
20/2/5	4822 410 10592	SHUTTLE KNOB VR969
20/2/6	4822 410 10593	JOG KNOB VR969
20/2/8	4822 410 10594	SLIDE KNOB VR969
20/4	4822 535 10318	SHAFT VR969
20/5	4822 535 10315	SHAFT VR969
20/7	4822 500 10516	SAFETY BOLT VR969

Power Supply PSM

MISCELLANEOUS

0010	4822 256 30514	FUSE HOLDER
0011	4822 256 30514	FUSE HOLDER
1010 ⚠	4822 070 31252	2181.25(1.25A)

CONNECTORS

0008 ⚠	4822 267 31064	MAINS CONNECTOR
1509	4822 265 10484	PIN ASSY 18P

CAPACITORS

2012	4822 121 10524	910	pF	100V
2014	4822 124 11559	2.2	µF	50V
2016	4822 121 42687	3,3	nF	63V
2018	4822 121 51299	1	nF	50V
2026	4822 121 51299	1	nF	50V
2030	5322 121 42386	100	nF	63V
2032	5322 121 42386	100	nF	63V
2036	4822 124 80874	47	µF	50V
2042	4822 121 70481	47	nF	400V
2050 ⚠	4822 121 70674	68	nF	250V
2052 ⚠	4822 121 70674	68	nF	250V
2054 ⚠	4822 126 13859	470	pF	250V
2056 ⚠	4822 126 13859	470	pF	250V
2059 ⚠	4822 126 13859	470	pF	250V
2060	4822 121 10525	330	nF	100V
2062	4822 124 80875	220	µF	25V
2064	5322 121 42661	330	nF	63V
2068	4822 124 80874	47	µF	50V
2069	4822 122 31175	1	nF	500V
2070 ⚠	4822 124 11561	47	µF	400V
2074	5322 121 42386	100	nF	63V
2076	4822 124 80874	47	µF	50V
2080	5322 121 42578	100	nF	250V
2081	4822 124 41751	470	µF	50V
2084	4822 124 41747	680	µF	35V
2085	4822 124 80874	47	µF	50V
2088	4822 124 80875	220	µF	25V
2090	4822 124 80875	220	µF	25V
2092	5322 121 42386	100	nF	63V
2096	4822 122 31116	2	nF	400V
2098	4822 124 41747	680	µF	35V
2099	4822 124 41747	680	µF	35V

RESISTORS

3010	4822 116 83864	10	k	0,5W
3012	4822 050 11002	1	k	0,4W
3014	4822 050 13902	3,9	k	0,4W
3016	4822 116 52244	15	k	0,5W
3018	4822 116 52257	22	k	0,5W
3020	4822 116 52251	18	k	1/6W
3022	4822 050 11003	10	k	0,4W
3026	4822 116 52228	680	R	0,5W
3028	4822 116 52304	82	k	0,5W
3030	4822 116 52303	8,2	k	0,5W
3032	4822 116 52186	22	R	0,5W only for S-VHS
3032	4822 116 52195	47	R	0,5W
3034	4822 116 52202	82	R	0,5W
3040	4822 116 52283	4,7	k	0,5W
3041	4822 050 23309	33	R	0,6W
3042	4822 050 21003	10	k	0,6W
3043	4822 050 21003	10	k	0,6W
3044	4822 050 21003	10	k	0,6W
3046	4822 050 21808	1,8	R	0,6W
3048	4822 050 21508	1,5	R	0,6W
3050	4822 116 83882	39	k	0,5W
3052	4822 116 83882	39	k	0,5W
3054	4822 050 21005	1	M	0,6W
3055	4822 050 21005	1	M	0,6W
3056	4822 050 21005	1	M	0,6W
3057	4822 050 21005	1	M	0,6W
3058 ⚠	4822 053 21395	3,9	M	0,5W
3059 ⚠	4822 053 21395	3,9	M	0,5W
3060	4822 116 83872	220	R	0,5W
3061	4822 157 60147	IND FIX HF-BEAD		
3062	4822 116 83864	10	k	0,5W
3063	4822 116 83872	220	R	0,5W
3064	4822 116 52283	4,7	k	0,5W
3067	4822 116 83872	220	R	0,5W
3068	4822 116 52186	22	R	0,5W
3069	4822 050 24708	4,7	R	1/8W
3070	4822 116 83872	220	R	0,5W
3071	4822 116 52199	68	R	1/6W
3072	4822 050 11002	1	k	0,4W
3073	4822 116 52234	100	k	1/6W
3074	4822 116 52289	5,6	k	0,5W
3075	4822 116 52291	56	k	1/6W
3076	4822 116 52263	2,7	k	1/6W
3077	4822 116 52259	2,4	k	1/6W
3078	4822 100 12163	470	R	
3080 ⚠	4822 052 10479	47	R	
3081	4822 116 52226	560	R	1/6W
3082	4822 116 52283	4,7	k	1/6W
3083	4822 116 52226	560	R	1/6W
3084	4822 116 52283	4,7	k	1/6W
3085	4822 116 52226	560	R	1/6W
3086	4822 116 52234	100	k	1/6W
3087	4822 050 15603	56	k	
3088	4822 116 52291	56	k	1/6W
3089	4822 050 15603	56	k	
3090	4822 050 23902	3,9	k	0,6W
3092	4822 050 11002	1	k	0,4W
3094	4822 116 52245	150	k	0,5W
3096	4822 116 52234	100	k	0,5W
3098	4822 116 52291	56	k	0,5W
3099	4822 116 52283	4,7	k	1/6W

COILS

5010 ⚠	4822 157 10454	Mains Filter
5050 ⚠	4822 146 10529	TRAFO PCT 13205-12/14 VERS.D
5069	4822 157 60147	2,2 µH
5080	4822 157 71461	22 µH 10%
5081	4822 157 52285	6,8 µH
5088	4822 157 71461	22 µH 10%
5090	4822 157 71461	22 µH 10%
5098	4822 157 71461	22 µH 10%

DIODES

6032	4822 130 31631	BYV10-20
6036	4822 130 30842	BAV21
6042	4822 130 10439	BY268 A
6046 ⚠	4822 130 31438	1N4001G
6048 ⚠	4822 130 31438	1N4001G
6050	5322 209 12018	DF08M
6076	4822 130 82885	BYT52M
6080	4822 130 83909	BYW98-200RL
6081	4822 130 82885	BYT52M
6082	4822 130 82885	BYT52M
6084	4822 130 10456	BZX79-B32
6088	4822 130 83909	BYW98-200RL
6092	4822 130 83909	BYW98-200RL
6096	4822 130 10455	DIO REC MBR1060 S only S-VHS
6098	4822 130 83934	MBR360 only for VHS

TRANSISTORS & IC's

7020	4822 209 90025	MC44603P
7040	4822 130 63794	STP3NA60
7050	4822 130 44503	BC547C
7056	4822 130 44503	BC547C
7058	4822 130 41344	BC337-40
7060	4822 130 41327	BC327-40
7070 ⚠	4822 209 32126	SOC1012T
7074	4822 209 81397	TL431CLPST
7084	4822 130 44503	BC547C
7085	4822 209 81397	TL431CLPRE
7088	4822 209 72742	L7812ACV
7090	4822 130 10237	MTD3055V1
7096	4822 130 44503	BC547C

⚠ Safety component, use only this type

Table of contents

Page

Chapter 1
TECHNICAL DATA AND FEATURES

Front page 1-1
Table of contents 1-2
Survey of sets and features 1-3
Survey of sets and PCB's 1-4
Technical specifications 1-5
Safety instructions 1-6/7
Survey of direction for use 1-8
Remote control 1-9
Direction for use 1-10/22

Chapter 2
TOOLS FOR ERROR DIAGNOSIS

Dismantling of the set 2-1/3
Servicing of SMDs 2-4/5
Error diagnosis system 2-6/12
Circuit descriptions 2-14/30

Chapter 3
PRINTED BOARDS

Adjustment procedures 3-1/8
List of abbreviations 3-11/17
Wiring diagram VHS 3-19
Wiring diagram VR967 3-20
Wiring diagram VR969 3-21
Block diagram analog part S-VHS 3-22
Block diagram digital part 3-23
Block diagram analog part VHS 3-24
Power supply PSM
PCB drawing PSM 3-26
Circuit diagram PSM **(PS)** 3-27
Front End Board PAL B/G/I
PCB drawing Front End PAL B/G/I 3-28
Circuit diagram Front End PAL B/G/I **(FE)** 3-29
Front End Board Multistandard
PCB drawing Front End Multistandard 3-30
Circuit diagram Front End Multistandard **(FE)** 3-31
Mother Board
PCB drawing Mother Board 3-32/33
Tuner/Modulator **(TM)** circuit diagram 3-34
SECAM Processing **(SE)** circuit diagram 3-35
Head Amplifier **(HC)** circuit diagram 3-36
Video Signal Processing **(VS)** circuit diagram 3-37
Deck Electronics **(DE)** circuit diagram 3-38
On Screen Display **(OS)** circuit diagram 3-39
Central Control **(CC)** circuit diagram 3-40
VPS **(VP)** circuit diagram 3-41
Input/Output Board
PCB drawing Input/Output Board 3-42/43
In/Out **(IO)** circuit diagram 3-44
Audio **(AU)** circuit diagram 3-45
VPT Board
VPT **(VT)** circuit diagram 3-46
PCB drawing VPT Board 3-47
S-VHS Board
PCB drawing S-VHS Board 3-48/49
Comb Filter **(CF)** circuit diagram 3-50
Luminance Processing **(SH)** circuit diagram 3-51
SECAM/PAL Transcoder Board
PCB drawing SECAM/PAL Transcoder Board 3-52
Chrominance Processing **(SF)** circuit diagram 3-53
Transcoder Part **(SP)** circuit diagram 3-54

Page

Key Board PKP31
PCB drawing, Circuit diagram PKP31 3-55
Display Control PDCPN4
PCB drawing PDCPN4 3-56
Circuit diagram PDCPN4 **(DC)** 3-57
Display Control PDCPN3
PCB drawing PDCPN3 3-58
Circuit diagram PDCPN3 **(DC)** 3-59
Display Control PDCPN2
PCB drawing PDCPN2 3-60
Circuit diagram PDCPN2 **(DC)** 3-61
Display Control PDCPN1
PCB drawing PDCPN1 3-62
Circuit diagram PDCPN1 **(DC)** 3-63
Display Control PCUPN1
Circuit diagram PCUPN1 **(DC)** 3-64
PCB drawing PCUPN1 3-65

Chapter 4
TAPE DECK

Deck parts replacement
Auxiliary tools for deck adjustment 4-1
Deck layout diagrams 4-2
Lift 4-2
Head disc 4-3
A/C Head 4-4
Threading motor 4-4
Capstan motor 4-4
Pressure roller 4-4
Roller unit right 4-4
Roller unit left 4-5
Adjustments
Tape path 4-5
Roller unit left; roller unit right 4-5
A/C Head 4-5
Horizontal distance 4-6
Brake band 4-6
Tape tension adjustment 4-6
Friction clutch control 4-6
Reverse brake control 4-6
Top view, Underside view 4-7
Exploded view
Cleaning and lubrication 4-8/9
Parts list 4-10

Chapter 5
PARTS LIST

Exploded view of cabinet parts 5-1
Cabinet parts 5-2
Front panel parts 5-3/4
Power supply 5-5
Front End Board PAL B/G/I 5-6
Front End Board Multistandard 5-7/8
Mother Board 5-9/15
Input/Output Board 5-15/18
S-VHS Board & Transcoder Board 5-18/22
Display Control PDCPN4 5-22
Display Control PDCPN3 5-23
Display Control PDCPN2 5-24
Display Control PDCPN1 5-25
Display Control PCUPN1 5-26
Complete PCBs, Cables 5-26
Sockets, Extension Adapter 5-26

Features

		VR666/02	VR666/16	VR666/39	VR668/02	VR668/05	VR668/06	VR668/16	VR668/39	VR768/02	VR768/05	VR768/16	VR768/39	VR768/59	VR967/02	VR967/16	VR967/39	VR967/58	VR969/02	VR969/05	VR969/16	VR969/39	VR969/58
Special features	Direct Record analog (WYSIWYR)	✔	✔	✔	✔	✔	✔	✔	✔	✔	✔	✔	✔	✔	✔	✔	✔	✔	✔	✔	✔	✔	✔
	Follow TV analog	✔	✔	✔	✔	✔	✔	✔	✔	✔	✔	✔	✔	✔	✔	✔	✔	✔	✔	✔	✔	✔	✔
	Back-up time h	7	7	7	7	7	7	7	7	7	7	7	7	7	7	7	7	7	7	7	7	7	7
	VCR1/VCR2 selection	✔	✔	✔	✔	✔	✔	✔	✔	✔	✔	✔	✔	✔	✔	✔	✔	✔	✔	✔	✔	✔	✔
	16:9 (via Scart pin 8)	✔	✔	✔	✔	✔	✔	✔	✔	✔	✔	✔	✔	✔	✔	✔	✔	✔	✔	✔	✔	✔	✔
	Edit Insert				✔	✔	✔	✔	✔	✔	✔	✔	✔	✔	✔	✔	✔	✔	✔	✔	✔	✔	✔
	Rapid Timecode																		✔	✔	✔	✔	✔
	Time and Date download	✔	✔	✔	✔	✔	✔	✔	✔	✔	✔	✔	✔	✔	✔	✔	✔	✔	✔	✔	✔	✔	✔
	Synchro Time	✔	✔	✔	✔	✔	✔	✔	✔	✔	✔	✔	✔	✔	✔	✔	✔	✔	✔	✔	✔	✔	✔
	Subtitle recording in correct colours				✔	✔	✔	✔	✔	✔	✔	✔	✔	✔	✔	✔	✔	✔	✔	✔	✔	✔	✔
	EASY LINK (Project 50)	✔	✔	✔	✔	✔	✔	✔	✔	✔	✔	✔	✔	✔	✔	✔	✔	✔	✔	✔	✔	✔	✔
	Teletext				✔	✔	✔	✔	✔	✔	✔	✔	✔	✔	✔	✔	✔	✔	✔	✔	✔	✔	✔
	On Screen Display (without TXT)	✔	✔	✔																			
	Jog/Shuttle								✔	✔	✔	✔	✔	✔	✔	✔	✔	✔	✔	✔	✔	✔	✔
	Comb filter																		✔	✔	✔	✔	✔
Edit	Synchro Edit				✔	✔	✔	✔	✔	✔	✔	✔	✔	✔	✔	✔	✔	✔	✔	✔	✔	✔	✔
	RS 232 interface																		✔	✔	✔	✔	✔
	MEI Edit																		✔	✔	✔	✔	✔
	LANC Edit									✔	✔	✔	✔	✔					✔	✔	✔	✔	✔
Programming	Transm. identif. via VPS/PDC	✔	✔	✔	✔	✔	✔	✔	✔	✔	✔	✔	✔	✔	✔	✔	✔	✔	✔	✔	✔	✔	✔
	Record prep. mode Scart 1&2	✔	✔	✔	✔	✔	✔	✔	✔	✔	✔	✔	✔	✔	✔	✔	✔	✔	✔	✔	✔	✔	✔
	FOLLOW TV (analog)	✔	✔	✔	✔	✔	✔	✔	✔	✔	✔	✔	✔	✔	✔	✔	✔	✔	✔	✔	✔	✔	✔
	PDC	✔	✔	✔	✔	✔	✔	✔	✔	✔	✔	✔	✔	✔	✔	✔	✔	✔	✔	✔	✔	✔	✔
	VPS	✔	✔	✔	✔		✔	✔	✔	✔		✔	✔	✔	✔	✔	✔	✔	✔		✔	✔	✔
	Gemstar Video+					✔					✔									✔			
	Gemstar Showview	✔	✔	✔	✔		✔	✔	✔	✔		✔	✔	✔	✔	✔	✔	✔	✔		✔	✔	✔
Video	SVHS														✔	✔	✔	✔	✔	✔	✔	✔	✔
	S-VHS Playback (SQPB)				✔	✔	✔	✔	✔	✔	✔	✔	✔	✔									
	NTSC Playback			✔	✔	✔	✔	✔	✔	✔	✔	✔	✔	✔	✔	✔	✔	✔	✔	✔	✔	✔	✔
	Studio Picture Control	✔	✔	✔	✔	✔	✔	✔	✔	✔	✔	✔	✔	✔	✔	✔	✔	✔	✔	✔	✔	✔	✔
Sound	Sound system: Nicam			✔		✔	✔	✔	✔		✔	✔	✔			✔	✔			✔	✔	✔	
	Sound system: German stereo	✔	✔	✔	✔		✔	✔	✔	✔		✔	✔	✔	✔	✔	✔	✔	✔		✔	✔	✔
Mechanism	Audio only recording	✔	✔	✔	✔	✔	✔	✔	✔	✔	✔	✔	✔	✔	✔	✔	✔	✔	✔	✔	✔	✔	✔
	Audio Dubbing				✔	✔	✔	✔	✔	✔	✔	✔	✔	✔	✔	✔	✔	✔	✔	✔	✔	✔	✔
	Audio Longplay [8h]	✔	✔	✔	✔	✔	✔	✔	✔	✔	✔	✔	✔	✔	✔	✔	✔	✔	✔	✔	✔	✔	✔
	Tape counter linear	✔	✔	✔	✔	✔	✔	✔	✔	✔	✔	✔	✔	✔	✔	✔	✔	✔	✔	✔	✔	✔	✔
	Quick view	✔	✔	✔	✔	✔	✔	✔	✔	✔	✔	✔	✔	✔	✔	✔	✔	✔	✔	✔	✔	✔	✔
	Winding Time E180 90s	✔	✔	✔	✔	✔	✔	✔	✔	✔	✔	✔	✔	✔	✔	✔	✔	✔	✔	✔	✔	✔	✔
	Flying Erase Head									✔	✔	✔	✔	✔					✔	✔	✔	✔	✔
	Videoheads	4	4	4	4	4	4	4	4	4	4	4	4	4	4	4	4	4	4	4	4	4	4
Tuning	Autoinstall					✔					✔									✔			
	ATS-EURO+	✔			✔					✔					✔				✔				
	Autostore with Preset Allocation		✔	✔		✔	✔	✔	✔		✔	✔	✔	✔		✔	✔	✔		✔	✔	✔	✔
TV system	PAL BG DK, SECAM BG DK													✔				✔					✔
	PAL BG, SECAM L-L´,SECAM BG			✔			✔		✔				✔				✔					✔	
	PAL I / IRELAND			✔		✔	✔		✔		✔		✔				✔			✔		✔	
	PAL BG	✔	✔		✔			✔		✔		✔			✔	✔			✔		✔		

PCBs & Tape Decks

Technical Data

Mains voltage	
Mains frequency	
Power consumption:	
with Low Power Standby	
Ambient temperature	
Relative humidity	
Weight	
Fast forward/rewind time	
Position of use	
Video resolution	

(D)

Technische Daten

... Netzspannung	
... Netzfrequenz	
... Leistungsaufnahme:	
Standby mit geringem Verbrauch	
Raumtemperatur	
Relative Luftfeuchtigkeit	
Gewicht	
Vor-/Rückspulzeit	
Betriebslage	
Video-Auflösung	
Audio	

(F)

Caractéristiques

. Tension secteur	220 – 240 V
. Fréquence	47 – 63 Hz
. Puissance absorbée:	18 W during operation
	15 W standby
avec la fonction veille faible consommation	< 1 W
. Température ambiante	+10°C to +35°C
. Humidité relative	20 – 80 %
. Poids	5.4 kg
. Temps (re-)bobinage	typ. 95s (E180 cass.)
. Position d'emploi	horizontally, max. 15°
. Résolution vidéo	≥ 240 lines VHS
	≥ 400 lines S-VHS
. Audio SP:	80Hz – 10kHz (±5dB)
Audio LP:	80Hz – 5kHz (±5dB)
FM Audio:	20Hz – 20kHz (±3dB)

(NL)

Technische Gegevens

Netspanning	
Netfrequentie	
Opgenomen vermogen: ...	
met Low Power Standby	
Omgevingstemperatuur	
Relatieve vochtigheid	
Gewicht	
Vooruit/terugspoeltijd	
Gebruikspositie	
Opplossend vermogen	

(E)

Datos Tecnicos

Tensión de red	
Frecuencia de red	
Consumo de potencia	
con standby de bajo consumo	
..... Temperatura ambiente	
..... Humedad relativa	
..... Peso	
..... tiempo de (re-)bobinado	
..... Posición de uso	
..... Resolución video	
Audio	

(I)

Dati Tecnici

Tensione di alimentazione	.... 220 – 240 V
Frequenza di rete	.... 47 – 63 Hz
Potenza assorbita:	.... 18 W during operation
	15 W standby
in attesa a basso consumo	< 1 W
Temperatura ambiente	.... +10°C to +35°C
Umiditá relativa	.... 20 – 80 %
Peso	.... 5.4 kg
Tempo di (ri-)avvolgimento ...	.... typ. 95s (E180 cass.)
Posizione di funzionamento ..	.... horizontally, max. 15°
Risoluzione video	.... ≥ 240 lines VHS
	≥ 400 lines S-VHS
Audio SP:	.... 80Hz – 10kHz (±5dB)
Audio LP:	.... 80Hz – 5kHz (±5dB)
FM Audio:	.... 20Hz – 20kHz (±3dB)

Safety instructions

- Safety regulations demand that the set be restored to its original condition and that components identical with the original types be used.

  Safety components are marked by the symbol ⚠

- All ICs and many other semi-conductors are susceptible to electrostatic discharges (ESD). Careless handling during repair may reduce life drastically. When repairing, make sure that you are conneted with the same potential as the mass of the set via a wrist wrap with resistance. Keep components and tools on the same potential.
- A set to be repaired should always be connected to the mains via a suitable isolating transformer.
- Never replace any modules or any other parts while the set is switched on.
- Use plastic instead of metal alignment tools. This in order to prelude short-circuit or to prevent a specific circuit from being rendered unstable.

Remarks

- The direct voltages and oscillograms ought to be measured relative to the set mass.
  EXCEPTION
  At the power supply, the DC voltages and the oscillograms at the primary side are measured to LIVE GND.
- The direct voltages and oscillograms mentioned in the diagrams ought to be measured with a colour bar signal and the picture carrier at 503.25 MHz (C25).
- The oscillograms and direct voltages have been measured in RECORD or PLAY mode.
- The semiconductors, which are mentioned in the circuit diagram and in the parts lists, are fully exchangeable per position with the semiconductors in the set, irrespective of the type designation of these semiconductors.

Sicherheitshinweise

- Die Sicherheitsvorschriften erfordern es, daß sich das Gerät nach der Reparatur in seinem originalen Zustand befindet und daß die zur Reparatur benutzten Ersatzteile mit den Originalersatzteilen identisch sind.

  Sicherheits-Bauteile sind mit der Markierung ⚠ versehen

- Alle IC's und Halbleiter sind empfindlich gegen elektrostatische Entladungen (ESD). Unvorschriftmässige Behandlung von Halbleitern im Reparaturfall kann zur Zerstörung dieser Bauteile oder zu einer drastischen Reduzierung der Lebensdauer führen. Sorgen Sie dafür, daß Sie sich im Reparaturfall über ein Armband mit Widerstand auf dem gleichen Potential, wie die Masse des Gerätes befinden. Alle Bauteile, Werkzeuge und Hilfsmittel sind auf das gleiche Potential zu legen.
- Ein zu reparierendes Gerät ist immer über einen Trenntransformator an die Netzspannung anzuschließen.
- Bei eingeschaltetem Gerät dürfen keine Module oder sonstige Einzelteile ausgetauscht werden.
- Zum Abgleich sind ausschließlich Kunststoffwerkzeuge zu benutzen (keine Metallwerkzeuge verwenden). Dadurch wird vermieden, daß ein Kurzschluß entstehen kann oder eine Schaltung instabil wird.

Anmerkungen

- Die Gleichspannung und Oszillogramme sind gegen Gerätemasse zu messen.
  AUSNAHME
  Beim Netzteil sind die Gleichspannungen und Oszillogramme auf der Primärseite gegen Live GND gemessen.
- Die Gleichspannungen und Oszillogramme angeführt in den Schaltbildern sollen unter folgenden Bedingungen gemessen werden: Farbbalkensignal, Bildträger auf 503.25 MHz (C25)
- Die Oszillogramme und Gleichspannungen sind in RECORD oder PLAY gemessen. Die in den Stücklisten aufgeführten Bauteile sind positionsweise voll auswechselbar gegen die Bauteile in dem Gerät, ungeachtet der etwaigen Typenbezeichungen.

Avertissements

- Les normes de sécurité exigent qu'aprés réparation l'appareil soit remis dans son état d'origine et que soient utilisées les piéces de rechange identiques à celles spécifiées.

  Les composants de sécurité sont marqués ⚠

- Tout les IC et beaucoup d'autres semi-conducteurs sont sensibles aux décharger statiques (ESD). Leur longévité pourrait étre considérablement écourté par le fait qu'aucune précaution n'est prise à leur manipulation. Lors de réparations s'assurer de bien étre relié au méme potential que la masse de l'appareil et enfiler le bracelet serti d'une résistance de sécurité. Veiller à ce que les composants ainsi que les outils que l'on utilise soient également à ce potentiel.
- Toujours alimenter un appareil à réparer à travers un transfo d'isolement.
- Ne jamais remplacer les modules ni d'autres composants quand l'appareil est sous tension.
- Pour l'ajustage, utiliser des outils en plastique au lieu d'instruments métalliques. Ceci afin d'éviter les court-circuits et exclure l'instabilité dans certains circuits.

Observations

- La mésure des tensions continues et des oscillogrammes doit se faire par rapport à la terre de l'appareil.
  EXCEPTION
  Sur l'unité d'alimentation la tension continue et l'oscillogramme sont mesurés sur le côte primaire en Live GND.
- La mésure des tensions continues et des oscillogrammes figurant sur le schéma doit se faire dans un signal de barre couleur porteuse image sur 503.25 MHz (C25).
- Les oscillogrammes et tension sont mésurées en mode RECORD ou PLAY.
- Les semi-conducteurs indiqués dans le schéma de principe et à la liste des compostants, sont interchangeables par repère sur ce chassis avec les semi-conducteurs de l'appareil quelle que soit la désignation de type donnée sur ces semi-conducteurs.

Veiligheidsinstructies

- Veiligheidsbepalingen vereisen, dat het apparaat in zijn oorspronkelijke toestand wordt teruggebracht en dat onderdelen, indentiek aan de oorspronkelijke, worden toegepast.
  De veiligheidsonderdelen zijn aangeduid met het symbool ⚠
- Alle IC's en vele andere halfgeleiders zijn gevoelig voor elektrostatische ontladingen (ESD). Onzorgvuldig behandelen tijdens reparatie kan de levensduur drastisch doen verminderen. Zorg ervoor, dat U tijdens reparatie via een polsband met weerstand verbonden bent met hetzelfde potentiaal als de massa van het apparaat. Houd componenten en hulpmiddelen ook op ditzelfde potentiaal.
- Sluit een apparaat dat gerepareerd wordt altijd via een scheidingstransformator aan op de netspanning.
- Verwissel nooit modules of andere onderdelen terwijl het apparaat is ingeschakeld.
- Gebruik voor het afregelen plastic i.p.v metalen gereedschap. Dit om mogelijke kortsluiting te voorkomen of een bepaalde schakeling instabiel te maken.

Opmerkingen

- De gelijksspanningen en oscillogrammen dienen gemeten te worden ten opzichte van de apparaat aarde.
- De gelijksspanningen en oscillogrammen vermeld in de schema's dienen gemeten te worden met een kleurbalkensignaal beelddraaggolf op 503.25 MHz (C25).
- De oscillogrammen en gelijksspanningen zijn in RECORD of PLAY mode gemeten.
- De halfgeleiders, die in het pricipeschema en in de stuklijsten zijn vermeld, zijn per positie volledig uitwisselbaar met de halfgeleiders in het apparaat, ongeacht de typeaanduiding op deze halfgeleiders.

Avvertimenti

- Le prescrizioni di sicurezza richiedono che l'apparecchio sia ricondotto alle condizioni originali e che siano usati ricambi originali.

  Componenti di sicurezza sono marcati con ⚠

- Tutti gli IC e semiconduttori sono sensibili a scariche elettrostatiche (ESD). Noncuranze durante la riparazione di semiconduttori possono danneggiarli o condurre ad una riduzione drastica della durata. Durante la riparazione assicurarsi di essere collegati allo stesso potenziale attraverso un bracciale di protezione contro scariche elettrostatiche. Inoltre tenere anche tutti i componenti e gli attrezzi a questo potenziale.
- Apparecchi da riparare bisogna collegarli sempre via un trasformatore isolante (separatore) alla tensione normale.
- Non scambiare moduli o altri componenti quando l'apparecchio è in funzione.
- Per l'accordo usare soltanto attrezzi di plastica (non usare attrezzi metallici). Cosí si evitano cortocircuiti e collegamenti instabili.

Osservazioni

- Misurare le tensioni continue e gli oscillogrammi riferiendosi alla massa dell'apparecchio.
  ECCEZIONE
  Le tensioni continue e gli oscillogrammi dall'alimentatore sono misurati sulla parte primaria contro GND-Live.
- Le tensioni continue e gli oscillogrammi indicati negli schemi di collegamento devono essere misurati secondo le condizioni seguenti: segnale barre colore, portante dell'immagine su: 503.25 MHz (C25).
- Gli oscillogrammi e le tensioni continue sono misurati in RECORD o PLAYBACK.
- I componenti indicati nelle liste sono intercambiabili con quelli nell'apparecchio nonostante l'eventuale denominazione di modelli.

Avisos

- Las instrucciones de seguridad exigen que después de la reparación el aparato se encuentre en el estado original y que las piezas de repuesto, utilizadas para la reparación, sean idénticas a las originales.

  Los componentes de seguridad estan marcados con ⚠

- Todos los IC y semiconductores son sensibles a descargas electrostáticas (ESD). Un tratamiento no conforme a las instrucciones de semiconductores en caso de reparación, podría llevar a la destrucción de estos componentes, o a una reducción drástica de la duración. Tenga cuidado de que, en caso de reparación, estar al mismo potencial que la masa del aparato, por una pulsera con resistencia. Ponga todos los componentes, herramientas y recursos al mismo potencial.
- Para reparar un aparato hay que conectarlo siempre a la alimentación a traves de un transformador de aislamiento.
- Cuando un aparato está en marcha no pueden ser cambiados módulos u otras piezas de repuesto.
- Para los ajustes hay que utilizar exclusivamente herramientas de plástico (nunca herramientas metálicas). Así se evitaran cortocircuitos y circuitos inestables.

Notas

- Hay que medir las tensiones continuas y los oscilogramas contra la masa del aparato.
- Las tensiones continuas y los oscilogramas mencionados en los esquemas tienen que ser medidos de manera siguiente: señal barra de color portadora de imagen en 503.25MHz (C25)
- Los oscilogramas y las tensiones continuas son medidas en „RECORD" y „PLAYBACK"
- Los componentes mencionados en las listas se los puede cambiar por los componentes en el aparato, a pesar de eventuales designaciones de tipos.

(GB) WARNING FOR LITHIUM BATTERIES!

Lithium batteries, if incorrectly used (excessive heat, wrong connection of terminals, short circuit represent a danger of explosion!
Lithium batteries must be replaced only by original spare parts.

(D) WARNHINWEIS ZU LITHIUM-BATTERIEN!

Bei fascher Handhabung (Überhitzung, Falschpolung oder Kurzschluß) der Lithium-Batterien besteht Explosionsgefahr!
Lithium-Batterien dürfen nur gegen Originalersatzteile getauscht werden.

(F) ATTENTION!

Pile au lithium.
Danger d'explosion si traitée incorrectement. Ne peut être remplacée que par un spécialiste (comme décrit dans les instructions de réparation).

(NL) OPGELET MET LITHIUM-BATTERIJEN!

Bij foutieve behandeling (oververhitting, foutieve poling of kortsluiting) van lithium-batterijen bestaat er explosiegevaar! Lithium-batterijen mogen slechts door originele onderelen vervangen worden.

(I) ATTENZIONE CON LE PILE AL LITIO!

In caso di utilizzo errato (surriscaldamento, errata posizione dei poli o cortocircuito) delle pile al litio consiste pericolo di esplosione! Le pile al litio si possone soltituire solo con pezzl di ricambio originali.

(E) AVISO!

Bateria de litio.
Por una inadecuada intervención puede explotar.
Solo debe ser cambiada por una persona con conocimientos técnicos (como en la guía de reparación se describe).

(DK) ADVARSEL!

Lithium batteri. Eksplosionsfare.
Udskiftning ma kun foretages af en sagkyndig, og som beskrevet in servicemanualen.

(S) VARNING!

Eksplosionsfara vid felaktigt batteribyte!
Använd samma batterityp eller ekvivalent typ som rekommenderas av apparattillverkaren.

(SF) VAROITUS!

Paristo voi räjähtää, jos se on virheellisesti asennettu!
Vaihda paristo ainoastaan laitevalmistajan suosittelemaan tyyppiin.

Survey of Direction for use (only VHS sets included)

The remote control 1-9
Savin energy 1-10
Connecting to a decoder 1-10
Connecting to a satellite receiver 1-10
Connecting to hifi equipment 1-10
Emergency interrupt 1-10
Storing tv channels 1-10
Still picture/super slow motion 1-12
Slow motion 1-12
The Jog/Shuttle functions 1-12
Correcting picture interference
The cleaning function 1-13
Selecting the audio track, audio-mix 1-13
Surround-sound playback 1-13
How do I know where I am currently on the tape? 1-13
Index search 1-13
Intro-scan 1-13
How can I record directly? 1-14
Direct recording with TV sets without "Easy Link" function 1-14
Erase protection 1-14
Longplay function 1-14
HiFi stereo reception 1-14
Programming with "ShowView" 1-15
How can I record from a satellite receiver? 1-15
A few general notes on programming 1-15
Sorting TV programmes for TIMER programming 1-16
Editing video recordings 1-16
The TXT decoder. Reading TXT with the video recorder 1-20
How can I read TXT? 1-20
Externally controlled TIMER recording 1-20
Tuner mode. Your video recorder as an extension of your TV set 1-20
Recording from another video/audio source 1-21
Recording audio only 1-21
View mode 1-21
The TV monitor function 1-21
Switching between VCR 1 and VCR 2 1-21
Playback via the aerial cable 1-22
Switching the built-in mod 1-22
Remote control of TV sets 1-22

1. BUTTONS, CONTROLS AND SOCKETS

For detailed explanations of the functions, see the corresponding chapters.

The remote control

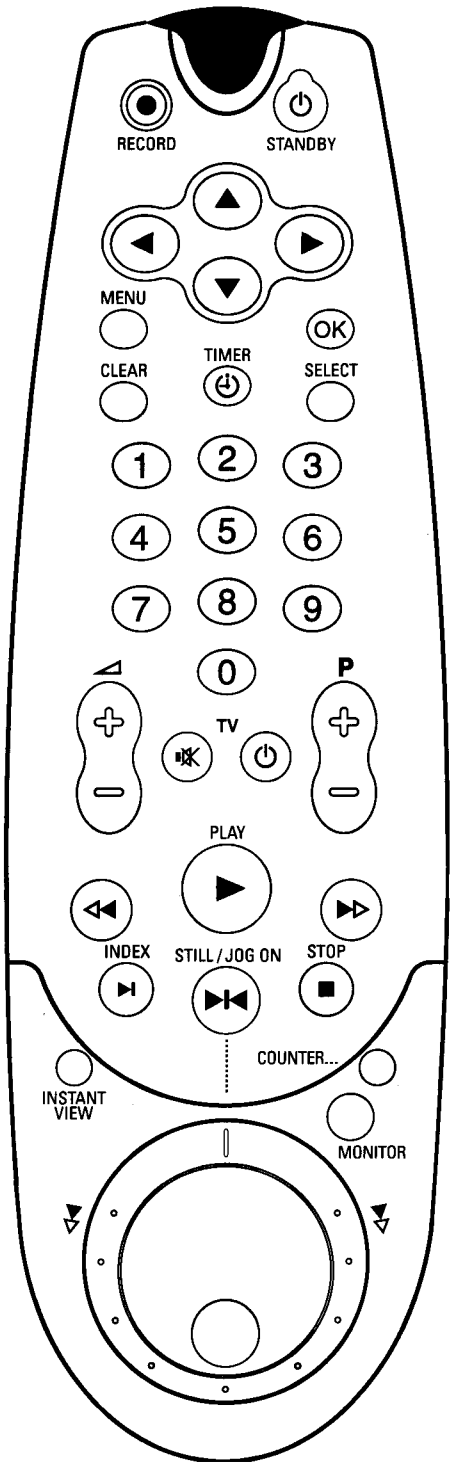

RECORD ●	Recording
STANDBY ⏻	Switching off
▲ / ▼ / ◀ / ▶	Cursor up/down, left/right
MENU	Call up the OSD page MAIN MENU
OK	Confirm entry
CLEAR	Reset/clear
TIMER ⏲	TIMER programming
SELECT	Select function
0 – 9	Numeric buttons
◁◀	Rewind/picture search reverse
PLAY ▶	Playback
▶▷	Fast forward wind/picture search forwards
INDEX ▶I	Search index mark
STILL / JOG ON ▶I◀	Still picture, Jog/Shuttle on/off
STOP ■	Stop/Pause
INSTANT VIEW	Picture search during fast wind
COUNTER	Tape counter
MONITOR	TV monitor function
-◎+	Jog/Shuttle

Additional TV functions: only for TV sets with the **same** remote control code.

TV ◢ + / –	TV volume +/-
TV 🔇	TV sound on/off
TV ⏻	TV off
TV P + / –	TV programmes +/-

The buttons which are not listed have **no** function

2. INSTALLATION. HOW DO I INSTALL THE VIDEO RECORDER ?

Saving energy

There are two ways of switching off to choose from.
1. Normal switch-off. Switch off by pressing the button [LOW POWER / STANDBY ⏻]. The time remains visible.
2. Energy-saving mode.
Press the button [LOW POWER / STANDBY ⏻] once again. The time in the display disappears. You can switch back on again by pressing the same button.

Note:
* It is not possible to switch to energy-saving mode as long as a TV set connected with a scart cable is switched on. "TV ACTIVE" appears in the video-recorder display.

Connecting to a decoder

Some TV stations transmit encoded (encrypted) signals which you can only decode for viewing if you use a bought or hired decoder (descrambler).

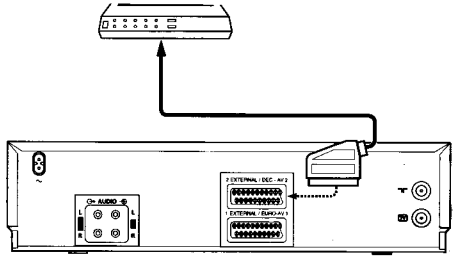

❶ Connect the decoder with a Scart cable to the [DEC.-AV 2] socket on the video recorder.
How to programme the decoder function when storing TV channels is described in the chapter **'Storing TV channels'**.

Notes:
* It is not possible to use the decoder at the same time for the video recorder and the TV set.
* The video recorder will automatically use the decoder when a programme position is selected on the video recorder which has been assigned to the decoder function when storing TV channels.

Connecting to a satellite receiver

It is possible to connect a satellite receiver to this video recorder.

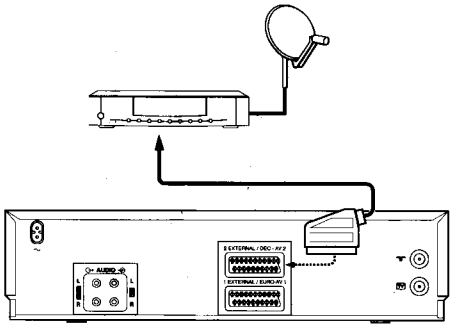

❶ Connect the satellite receiver by means of a Scart cable to the video recorder (socket [DEC.-AV 2]).

❷ Switch the video recorder on and select the programme position "E 2".

Connecting to hifi equipment

You can play the sound of your video rcorder via your hifi equipment.

❶ Connect the [AUDIO L IN R] and [AUDIO L OUT R] sockets on the back of your video recorder with the corresponding sockets on your hifi equipment.
A cable can be purchased at a specialized dealer.

Emergency interrupt

The video recorder and the remote control have an emergency interrupt function. You can interrupt any function by pressing the [STANDBY ⏻] button.
Whenever you have any problems while operating the video recorder, you can simply interrupt any function and start again.
You can practise using the video recorder without worrying. No matter which button you press, you won't damage the video recorder.

3. STORING TV CHANNELS

In order that your video recorder can record TV programmes, the TV channels (e.g. "ARD") must first be stored in the video recorder.
You can store up to 99 TV channels.
Your video recorder has a receiver of its own. This means it can be used independently of the TV set.

The "Easy Link" function

easy LINK

This function enables your video record to exchange information with the TV set. For this reason, also take note of the operating instructions that accompany your TV set.

The TV set and video recorder ([EURO-AV 1] scart socket) must be connected using the **special scart cable supplied** and your TV set must **have** the "Easy Link" function.

❶ Switch on the TV set.

❷ Pull out the mains plug and plug it back in again.

❸ The video recorder automatically loads all of the TV channels stored in the TV set in the correct order. This can also take a few minutes.
The following display appears on screen:
"EASY LINK loading from TV – please wait",
"EASY LINK" appears in the video-recorder display.
Once all TV channels have been found, the video recorder switches itself off.

❹ Select the desired display language. To do this, press the button [ATS] on the video recorder.

❺ The OSD page "LANGUAGE" appears on screen. Select the desired display language.

❻ Confirm the setting by pressing the button [OK]. The OSD page "COUNTRY" appears on screen. Select your country.

❼ Confirm the setting by pressing the button [OK]. "EASY LINK" appears briefly in the videorecorder display.

It is still possible at this stage to assign special functions to certain channel numbers. For further information, see the section "Manual search".

ATS Euro+ (Automatic channel search)

The ATS Euro + function is not possible if the connected TV set has "Easy Link".

The video recorder will make a search for all TV channels. It orders them in a logical sequence in the memory.

❶ Switch the TV set on and select the channel number for the video recorder.

❷ Press the button [ATS] on the video recorder.

❸ The OSD page "LANGUAGE" appears on screen. Select the display language desired.

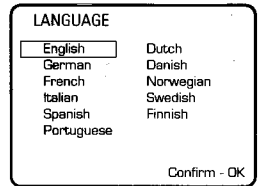

❹ Confirm by pressing the button [OK]. The OSD page "COUNTRY" appears on screen. Choose your country.

❺ Confirm by pressing the button [OK]. The automatic tuning begins.

❻ Wait until all TV channels have been found. This may take a few minutes.
Once all TV channels have been found, a message, e.g. "ATS Euro+ ready 28 TV channels found" appears on screen. The automatic channel search is over.

❼ Press the button [OK]. The OSD page "INSTALLATION MENU" appears on screen.

❽ Complete the setting by pressing the button [MENU].

Note:
*When an ATS Euro+ is restarted, the "INSTALLATION MENU" appears after Step ❷.
Select "ATS Euro+" and proceed with Step ❻.
TV channels already stored will be retained. If the message "FULL" appears briefly in the video recorder display, all of the video recorder's channel storage places have been occupied.

For details of how to change the sequence, please read the section entitled "Channel preset".
At this stage, you can still determine special functions for certain channel numbers. See the section "Manual search" for further information.

Assigning TV channels automatically (Follow TV)

The following setting is not necessary if the TV channels have been set using the "Easy Link" function.

Only if the video recorder (socket EURO-AV 1) and the TV set are connected **by means of a scart cable** can the TV channels be allocated automtically.
This means that the video recorder takes on the same channel sequence as the TV set.

❶ Switch the TV set on and select the channel number for the video recorder.

❷ Press the button ATS on the video recorder.

❸ Select the line "Follow TV". Press the button ▶.

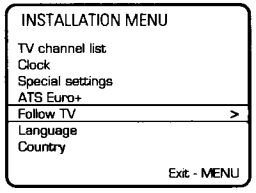

❹ The video recorder's display indicates "SELECT TV P01".

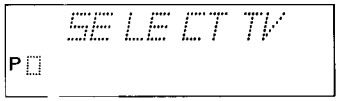

❺ Select the programme position "1" **on the TV set**.

❻ Confirm with the OK button on the video recorder's remote control. The video recorder's display indicates "WAIT". The video recorder compares its programme positions with the programme positions of the TV set.
If the programme position on the video recorder and on the TV set is the same (e.g. "P 01"), the video recorders loads the TV channel from the TV set.

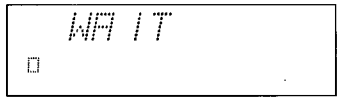

❼ Wait until the video recorder's display indicates, for example, "SELECT TV P02".

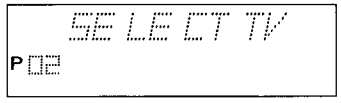

❽ Select the programme position "2" **on the TV set**.

❾ Confirm with the OK button on the video recorder's remote control. The video recorder's display indicates "WAIT".

❿ Repeat the steps ❼ to ❾ until all TV channels are allocated.

⓫ Press the MENU button to terminate the adjustment. The video recorder's display indicates briefly "READY".

It is possible to assign special functions to certain programme positions. This is explained in the paragraph "Manual search".

Assigning TV channels manually

The following setting is not necessary if the TV channels have been set using the "Easy Link" or "ATS Euro+" functions.

This function enables you to allocate any TV channel found to the programme number of your choice so that you have, for example, the same TV channel sequence as on your TV set.

❶ Switch on the TV set and select the programme number for the video recorder.

❷ Call up the "INSTALLATION MENU" by pressing button ATS. The line "TV channel list" becomes active.

❸ Confirm the line by pressing the button ▶. The panel "TV CHANNEL LIST" appears. The last programme number selected e.g. "01" becomes active.

❹ Select the TV channel that you wish to move by pressing the button ▼ or ▲.
Press the button ▶.

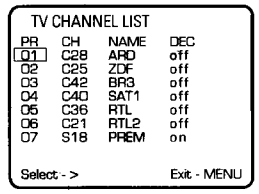

❺ Using the button ▼ or ▲, move the TV channel to the desired programme storage place.

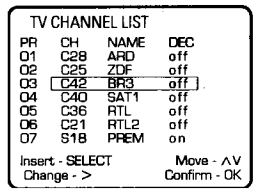

❻ Confirm by pressing the button OK. The TV channel line is inserted and the other channel lines are moved on a line. If you wish to cancel an **unde sired** TV channel, press the button CLEAR instead of button OK.

❼ Sort all of the TV channel lines (steps ❹ - ❻) into the desired order.

❽ Complete the setting by pressing the button MENU twice.
If you wish to change the basic setting, read the detailed notes in the section "Manual search".

Correcting picture interference. The cleaning function

Each time you start a new playback, the video recorder automatically adjusts the correct tracking for the cassette.
For cassettes recorded on another recorder, it is possible to improve the automatically made optimum adjustment as follows.

1. Press the MENU button on the remote control.
2. During playback or still picture mode, select the menu line "Picture" and confirm with the ▶ button.
3. The "PICTURE" menu appears on the screen. The option "Tracking" (on playback) **or** "Vertical jitter" (still picture) is highlighted.

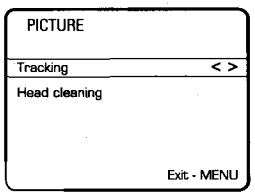

4. Press the ◀ or ▶ button until the best picture quality is obtained.

If horizontal interference bars cannot be removed, proceed as follows:

5. Select the menu item "Head cleaning". During playback, press the ▶ button. The video heads are cleaned.
6. Terminate the adjustment with the MENU button.

Note:
* When using cassettes of bad quality, it is nevertheless possible that interferences occur.

Selecting the audio track, audio-mix

You can select the audio track you want to hear during playback or in tuner mode. This is especially useful for two-channel sound (multi-language) transmissions.

1. Press the SELECT button. The display indicates the current setting. If you press the SELECT button repeatedly, you can select between four possibilities (STEREO, LEFT, RIGHT, MONO).

Notes:
* During playback, you can select a further possibility, the "MIXMODE" function.
With this function, you will hear the mono sound of the normal (linear) track together with the sound of the stereo track. This enables you to play recordings which have been dubbed on another video recorder.
* If no stereo sound is recorded on the cassette, the video recorder switches automatically to mono sound.

Surround-sound playback

If your TV set or hifi equipment is suited for sourround-sound play, the video recordings will be played back with this audio system.

How do I know where I am currently on the tape?

The length of the tape is indicated in minutes on the cassette, e.g. "E180" corresponds to 180 minutes playing time (= 3:00 hrs).
The length indication is found on the front narrow side of the cassette to the left. The actual playing time may be slightly longer than indicated (e.g. 3:05 hrs).

1. Start the tape measurement function with the COUNTER button on the remote control.
After a few moments, the video recorder's display indicates briefly , e.g. "TIME LEFT 2:20"

Then the video recorder switches, for example, to "STOP".
The video recorder's display indicates, for example, "P03 L 2:20"

2. With the COUNTER button, you can select between the following indciations:
elapsed playing time e.g. 0:40
remaining playing time e.g. L 2:20 ("**L**"=TIME LEFT)
real time counter e.g. 00:1:45 (in hrs/min).

Notes:
* When a cassette is inserted, the video recorder must at first calculate the playing time. That is why the display indicates at first "- : - -" and only after several seconds tape run the playing time.
* You can set the tape counter manually to "0". Use the COUNTER button to select the counter mode, then press the CLEAR button.
* If a minus sign appears in front of the real time counter (e.g., "- 0:20"), the tape is not wound to its beginning.
* The indications can be read off exactly to the minute during recording, playback and pause/stop.

Index search

The video recorder writes a mark on the tape every time a recording is started. With the INDEX ▶▮, ▮◀◀, ▶▶ or PLAY ▶ buttons on the remote control you can find these marks on the tape.

1. Press the INDEX ▶▮ and ▶▶ buttons to find the next mark and the INDEX ▶▮ and ▮◀◀ buttons to find the previous mark. The video recorder's display indicates "INDEX".
2. As soon as the mark is found, the video recorder switches automatically to playback.

Intro-scan

1. Press the INDEX ▶▮ and PLAY ▶ buttons. The video recorder's display indicates "INTRO".
2. The tape is wound to the next mark, played back for 10 seconds, then wound to the next mark and played back for 10 seconds, and so on.
When the end of the tape is reached, the tape is automatically rewound to the beginning.

Notes:
* If you press any tape run button (e.g. PLAY ▶ or STOP ■) during the index search or intro-scan function, the video recorder interrupts this function.
* For recodings made without marks on another video recorder, the index search and intro-scan functions cannot be used.

Sorting TV programmes for TIMER programming

Do you prefer certain TV programmes for TIMER recording?
With the Sort function, you can create a separate programme list to your preferences.

> Note:
> * The programme order stored in the video recorder is **not changed.** Only the TV programmes in the OSD page "EASY TEXTPROGRAMMING" are brought in a new order.

1. Switch on the TV set and select the programme position intended for the video recorder.
2. Press the [MENU] button on the remote control. The OSD page "MAIN MENU" appears on the picture screen.
3. Select the option "Easy Textprogramming". Confirm with the [▶] button.
4. The OSD page "EASY TEXTPROGRAMMING" appears on the picture screen. A page number of the last selected programme position is highlighted.
   Use the [◀] button to select the programme position.
   The number of the programme position and the programme name are highlighted.
5. Select your favourite TV programme from which you wish to make most of your TIMER recordings.
6. Press the [SELECT] button. The programme name disappears and two horizontal lines appear in the place of the programme position number.

EASY TEXTPROGRAMMING

Prog.	Page			
14 ARTE	100	100	100	100
15 CNN	100	100	100	100
--	100	100	100	100
17 ARD	301	302	303	304
18 PREM	100	100	100	100

Please enter programme number - 0 - 9
Exit - MENU

7. Enter the programme position number "01" as **two digits** with the numeric buttons [0 – 9]. When the entry is completed, the selected TV programme is allocated to the fist programme position and the other programmes are shifted by one position.
8. Select the TV programme you wish to appear at the second position in the list.

Repeat the steps 5 to 7 until your favourite TV programmes are in the desired order.

EASY TEXTPROGRAMMING

Prog.	Page			
01 ARD	100	100	100	100
02 ZDF	100	100	100	100
03 RTL	100	100	100	100
04 SAT1	100	100	100	100

Select programme - ∧∨
Insert - SELECT
Textprog - OK
Select page - >
Exit - MENU

9. Terminate with the [MENU] button.

7. EDITING VIDEO RECORDINGS

It is not possible to simply cut video tapes with a pair of scissors then splice them.

If you wish to join and/or insert new scenes without disturbing transitions and exactly to the picture into existing recordings, it is necessary to use an electronic cutting facility when copying from one video tape to another.
This creation of "new" video recordings is called "editing". For editing, different methods can be used.

Audio dubbing
This means that an appropriate sound is added to an existing video recording.
With this function, it is possible to **replace** the mono sound track on the video tape with another sound. The old mono track is completely erased. The stereo sound track and the video recording remain unchanged.

The insert and insert-edit functions
With the insert functions, it is possible to conveniently insert other picture and/or sound recordings into existing recordings **without disturbing transitions.**
You have the choice between three insert functions.

Synchronous editing (synchro-edit)
When copying between this video reocorder and a second video recorder or camcorder being correspondingly equipped, this function provides for a synchronous start of both units.
This ensures that every scene will be copied **exactly to the picture** and **without disturbing transitions**.

Audio dubbing

With this function, it is possible to replace the mono sound track on the video tape with another sound.
Connect the sound source (e.g. a CD player) to the input sockets [L AUDIO R] (at the front of the video recorder, behind the flap at the left).

Make sure that the "correct" cassette is inserted into the video recorder.

1. During playback, search the tape position where dubbing is to be started.
2. Press the [STOP ■] button.
3. Press the [MENU] button on the remote control. Select the option "Edit". Confirm with the [▶] button.
4. The OSD page "EDIT" appears on the picture screen. Select the option "Dubbing". Confirm with the [▶] button.

Follow the user guide on the OSD page.

5. The OSD page "AUDIO DUB" appears on the picture screen. Switch the sound source on.
   Start dubbing at the right moment by pressing the [RECORD ●] button.
   The video recorder records the sound from the external sound source. The sound level is automatically controlled. The sound track is replaced and recorded again.
6. Interrupt dubbing with the [STOP ■] button.
7. Terminate dubbing with the [MENU] button or the [STANDBY ⏻] button on the remote control.

The insert functions

With the insert functions, it is possible to conveniently insert other picture and/or sound recordings into existing recordings.

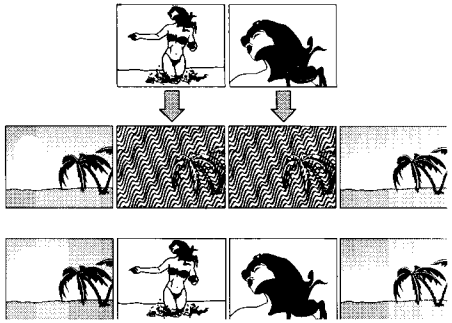

Connect the video/audio source to the input sockets VIDEO and L AUDIO R (= AV) of the video recorder. The sockets are located behind the left flap at the front of the recorder, **or**
connect the video/audio source to the Scart sockets EURO-AV 1 or DEC.-AV 2 of the video recorder. The sockets are located on the back of the video recorder.

You have the choice between three insert functions.

- "INSERT DUBBING": the picture, the hifi sound (helical track), and the mono sound (longitudinal track) are newly recorded.
- "INSERT VIDEO": the picture and the hifi sound (helical track) are newly recorded, the mono sound (longitudinal track) is maintained.
- "INSERT COPY": the picture is newly recorded. The mono sound (longitudinal track) is retained and transferred onto the hifi track (helical track).

Please also see the operating instructions of the connected unit.
Insert the recorded cassette into the video recorder. Make sure the cassette is not protected against recording!

1. Switch on the TV set and select the programme position intended for the video recorder.
2. Switch the video recorder on and select the programme position for the connected video/audio source ("AV", "E1" or "E2").
3. Press the MENU button on the remote control. Select the option "Record modes". Confirm with the ▶ button.
   The OSD page "RECORD MODES" appears on the picture screen.

Follow the user guide on the OSD page.

4. Select the desired insert function:
   "INSERT DUBBING" **or** "INSERT VIDEO" **or** "INSERT COPY".
5. Search the desired end of the insert recording on the cassette in the video recorder.
   Press the CLEAR button to reset the tape counter to "00:00:00".
6. Search the desired beginning of the insert recording on the cassette in the video recorder.
   Press the STOP ■ button.
7. Switch on the external video/audio source. Search the beginning of the insert recording.
8. Start the insert recording at the "correct" moment with the RECORD ● button.
   The insert recording is **automatically stopped** when the tape counter has reached "00:00:00".
9. Press the MENU button or the STANDBY ⏻ button on the remote control to terminate the recording.

Note on "INSERT VIDEO":
* To start playback of the "original" sound, repeatedly press the SELECT button on the remote control until the video recorder's display indicates "MONO".

Adjusting the video recorder (VCR) to the camcorder (CC) (edit-setup)

You can synchronously copy between this video recorder (VCR) and an appropriately equipped camcorder (CC). Both units are started at the same time with the help of a synchronous impulse and an adjustable start delay (= preroll time).
Various operating and cabling variants are possible. You will find an overview of the synchro-edit cables at the end of this operating manual.

Connect the two units with the corresponding synchro-edit cable (socket SYNCHRO EDIT on your video recorder).
Connect the video/audio source to the input sockets VIDEO and L AUDIO R (= AV) on the video recorder. The sockets are to be found behind the left flap at the front of the recorder.

Please also observe the operating instructions of the camcorder.
Insert a cassette **without erase protection** into the video recorder

1. Switch on the TV set and select the programme position intended for the video recorder.
2. Press the MENU button on the remote control. The OSD page "MAIN MENU" appears on the picture screen.
3. Select the menu option "Edit". Confirm with the ▶ button.
4. The OSD page "EDIT" appears on the picture screen; the option "Edit Setup" is highlighted. Confirm with the ▶ button.

Follow the user guide on the OSD page.

5. Switch the **camcorder** to **playback-pause**.
6. Press the OK button on the video recorder's remote control. Wait until the video recorder has recognized the connected camcorder.

Follow the user guide on the OSD page.

7. You can call up the default start delay (= preroll time) for the connected camcorder type by pressing the CLEAR button. It is then possible to alter the preroll time with the ◀ or ▶ button.
8. Press the ▼ button.
   Select the desired insert edit function:
   "INSERT DUBBING" **or** "INSERT VIDEO" **or** "INSERT COPY".
9. Confirm with the MENU button.

Note:
* The start delay (= preroll time) must be adjusted only once. The video recorder will save this setting. Keep in mind that other camcorder types must also be adjusted when being used the first time.

Synchronous editing (synchro-edit)

1. Call up the OSD page "EDIT MENU".
   Use the ▼ button to select the option "Synchro Edit". Confirm with the ▶ button.
2. The OSD page "SYNCHRO EDIT" corresponding to the connected camcorder type appears on the picture screen.
3. Use the SELECT button to select the OSD page for **video recorder** mode. Search the beginning of the recording on the video recorder.
   Switch the video recorder to playback-pause.
4. Use the SELECT button to select the OSD page for **camcorder** mode. Search the beginning of the recording on the camcorder.
   Switch the camcorder to playback-pause.

Follow the user guide on the OSD page.
The way copying is started depends on the camcorder and the corresponding synchro-edit cable used.

Insert-edit functions

With the insert-edit functions, it is possible to conveniently insert other picture and/or sound recordings into existing recordings.

Connect the two units with the corresponding synchro-edit cable (socket [SYNCHRO EDIT] on your video recorder).
Connect the video/audio source to the input sockets [VIDEO] and [L AUDIO R] (= AV) on the video recorder. The sockets are to be found behind the left flap at the front of the recorder.

You have the choice between two insert-edit methods:

- Method 1 "INSERT VCR": you mark on the cassette in the video recorder the tape position where the "new" recording is to **end**.
- Method 2 "INSERT CC": you mark on the cassette in the camcorder the **beginning** and the **end** of a "scene" (tape position) you wish to insert into an existing recording.
  However, this works only if the camcorder is equipped with a 2.5 mm ø control socket (LANC control).

You have the choice between three insert-edit functions:

- "INSERT DUBBING": the picture, the hifi sound (helical track), and the mono sound (longitudinal track) are newly recorded.
- "INSERT VIDEO": the picture and the hifi sound (helical track) are newly recorded, the mono sound (longitudinal track) is maintained.
- "INSERT COPY": The picture is newly recorded. The mono sound (longitudinal track) is retained and transferred onto the hifi track (helical track).

Note:
* The video recorder will always use that insert function you have selected in the paragraph "Adjusting the video recorder to the camcorder".

Please also see the operating instructions of the camcorder.
Insert the recorded cassette into the video recorder. Make sure the cassette is not protected against recording!

1. Switch on the TV set and select the programme position intended for the video recorder.
2. Press the [MENU] button on the remote control. The OSD page "MAIN MENU" appears on the picture screen.
3. Select the menu option "Edit". Confirm with the [▶] button.
4. The OSD page "EDIT" appears on the picture screen. Select the option "Insert Edit". Confirm with the [▶] button.

The OSD page "INSERT EDIT" corresponding to the connected camcorder type appears on the picture screen.
Follow the user guide on the OSD page.

5. Confirm the menu option "Insert VCR" **or** select the option "Insert CC".
   Confirm with the [▶] button.

Method 1 "Insert VCR":

6. Use the [SELECT] button to select the OSD page for **video recorder** mode. Search on the cassette in the video recorder the tape position where the recording is to end. Mark this position with the [▶] button.
7. Search on the cassette in the video recorder the tape position where the recording is to begin. Switch the video recorder to playback-pause.
8. Use the [SELECT] button to select the OSD page for **camcorder** mode.
   Search on the cassette in the camcorder the tape position where the recording is to begin.
   Switch the camcorder to playback-pause.

Method 2 "Insert CC":

6. Use the [SELECT] button to select the OSD page for **video recorder** mode.
   Search on the cassette in the video recorder the tape position where the recording is to begin.
   Switch the video recorder to playback-pause.

Depending on the camcorder type connected, it is possible to mark the **beginning** and the **end** of the recording.
Follow the user guide on the OSD page.

7. Use the [SELECT] button to select the OSD page for **camcorder** mode. Search on the cassette in the camcorder the tape position where the insert recording is to begin and – if possible – mark the position with the [◀] button, **or**
   switch the camcorder to playback-pause.
8. If necessary, search on the camcorder the desired **end** of the insert recording and mark it with the [▶] button.

Follow the user guide on the OSD page.
How to start the insert recording depends on the camcorder used and the corresponding synchro-edit cable.

Variant 1. The video recorder controls the camcorder

9. Start copying with the [RECORD ●] button on the video recorder.
   The camcorder starts with "PLAYBACK" and at the same time the video recorder starts with "RECORDING".
   The sound level is automatically controlled.
10. The insert recording is automatically stopped. If you wish to stop earlier, press the [STOP ■] button on the video recorder.
11. Terminate insert-edit recording with the [MENU] button or the [STANDBY ⏻] button on the remote control.

Variant 2. The camcorder controls the video recorder (only possible with "Insert CC").

9. Start copying with the corresponding button on the camcorder or its remote control.
   The camcorder starts with "PLAYBACK" and at the same time the video recorder starts with "RECORDING".
   The sound level is automatically controlled.
10. The insert recording is automatically stopped. If you wish to stop earlier, press the PAUSE or STILL button on the camcorder or its remote control.
11. Terminate insert-edit recording with the [MENU] button or the [STANDBY ⏻] button on the remote control.

Note:
* If your camcorder is equipped with a 2.5 mm ø control socket (LANC control), the playback and fast wind functions of the camcorder can be controlled with the corresponding buttons on the video recorder.

8. ADDITIONAL FUNCTIONS OF YOUR VIDEO RECORDER

In addition to the already described functions, your video recorder has some special features which still increase its convenient use.

The TXT decoder. Reading TXT with the video recorder

With this video recorder, you can receive TXT programmes broadcast in your country (e.g. Videotext / Teletext / Top / Flof / Fastext / Supertext, etc.), even if your TV set is not provided with the TXT function.
Beside the comprehensive offer of TXT pages, this function offers you two further advantages:

- With your video recorder, you can visualize and record TXT subtitles.
- For record programming, you can take advantage of the convenient help provided by the TXT TV programme overview pages.

How can I read TXT?

❶ Switch on the TV set and select the programme position intended for the video recorder.

❷ Switch the video recorder on.

❸ Select on the video recorder the TV programme the TXT pages of which you wish to read. For this, use the [▼] or [▲] button or the numeric buttons [0-9] on the remote control.

❹ Press the [MENU] button on the remote control. The OSD page "MAIN MENU" appears on the picture screen.

❺ Select the option "Easy Textprogramming". Confirm with the [►] button.

❻ The OSD page "EASY TEXTPROGRAMMING" appears on the picture screen.
The selected programme position (e.g. "03 RTL") and one Teletext page (e.g. "100") are highlighted.

EASY TEXTPROGRAMMING

Prog.	Page			
01 ARD	100	100	100	100
02 ZDF	100	100	100	100
03 RTL	100	100	100	100
04 SAT1	100	100	100	100

Select programme - ∧V
Insert - SELECT — Textprog - OK
Select page - > — Exit - MENU

❼ Use the [SELECT] button to call up the TXT pages you wish to read.
If you wish to have an overview about the entire TXT information offer, press the [◄] button and then the [OK] button. A programme-specific TXT overview page will appear, **or**
enter the number of the desired TXT page with the numeric buttons [0-9]. The number must always be entered as three digits.

The entered page number appears at the left in the top information line on the picture screen. After a few seconds search time, the page appears on the screen.
If you wish to read another page, simply enter the new page number.
With some TV channels, you can use the [◄] or [►] button on the remote control to directly call up the desired TXT page. You will find the corresponding hints in colour on the bottom picture border.

❽ To switch the TXT decoder off, repeatedly press the [MENU] button until the "normal" TV programme appears on the picture screen.

Externally controlled TIMER recording

Do you have another device, such as a satellite receiver, equipped with an integrated clock which can be used for controlling other devices?
If so, you can control the recording from such an external device via the Scart socket [DEC.-AV 2].

Insert a cassette not protected against recording.

❶ Switch the video recorder off with the [STANDBY ⏻] button on the remote control.

❷ Press the [MONITOR] button on the remote control for **more than three seconds**.
In the video recorder's display appears "E2 REC PREP".
The video recorder is prepared for recording.

❸ Recording is started and stopped by remote control via the Scart socket [DEC.-AV 2].

❹ If you wisht to terminate the function **before** a recording is started, press the [MONITOR] button a few seconds until the video recorder switches off.

❺ If you wish to abort the function **during** a running recording, press the [STANDBY ⏻] button.

Notes:
* It is **not** possible to use a decoder with this function.
* If the video recorder is prepared for externally controlled recordings, in cannot be switched in the "save energy" mode.

Tuner mode. Your video recorder as an extension of your TV set

You can also use your video recorder as a TV receiver (tuner). This is handy if your TV set does not have a remote control or if it has fewer programme positions than the number of channels it could actually receive. A decoder connected can be used.
Proceed as follows:

❶ Switch on the TV set and select the programme position intended for the video recorder.

❷ Switch the video recorder off with the [STANDBY ⏻] button on the remote control.

❸ Press the [STOP ■] button for **more than 3 seconds**.
The video recorder's display indicates the station name and the current time.

❹ Select the desired programme position number with the [▼] or [▲] button, or
enter the number as one or two digits with the numeric buttons [0-9].

❺ Switch the video recorder off with the [STANDBY ⏻] button if you do no longer wish to view TV.

Recording from another video/audio source

With this video recorder, you can make recordings from an external video/audio source, for example a second video recorder or a camcorder.
To do this, a Scart cable will be required.

1. Connect this video recorder with the unit you wish to record from, for example a second video recorder.

For this, connect the Scart socket of each unit with a Scart cable. On this video recorder, use the [DEC.-AV 2] Scart socket.

> Note:
> * In the following example, your video recorder is used as recording recorder and is referred to as VCR B. The second video recorder is used for playback and is referred to as VCR A.

2. Insert a recorded cassette into VCR A and a cassette without erase protection into VCR B.
3. Select the programme position "E2" on the VCR B. This is to be found next to the programme position "P 01" ("P 01" - "E1" - "E2" - "AV"). For this, use the [▼] or [▲] button.
4. To start recording, press the playback button, for example [PLAY ▶], on the VCR A and the record button [RECORD ●] on the VCR B.
5. To stop copying, press the [STOP ■] button on both video recorders.

Recording audio only

You can use your video recorder as a hifi tape recorder.
This means that only the stereo or dual sound is recorded from an external sound source (e.g., hifi equipment, second video recorder, etc.).
Connect your hifi (stereo) unit with an audio connecting lead to the [AUDIO L IN R] at the back of the video recorder.

Insert a cassette without erase protection into the video recorder.

1. Press the [MENU] button on the remote control. Select the option "Record modes". Confirm with the [▶] button.
2. The OSD page "RECORD MODES" appears on the picture screen. Select the option "Audio Only". Confirm with the [▶] button.
3. The OSD page "AUDIO ONLY" appears on the picture screen. Switch on the sound source. Start sound recording at the desired moment with the [RECORD ●] button.

The video recorder records the sound from the external sound source. The sound level is automatically controlled. The video recording on the cassette is erased.

4. To stop the recording, press the [STOP ■] button.
5. To terminate this function, press the [MENU] button or the [STANDBY ⏻] button on the remote control.

View mode

You can view the picture from an external unit connected to the Scart socket [DEC.-AV 2] of your video recorder on the picture screen (monitor) of a TV set. The external unit can be, for example, a second video recorder, a decoder, a satellite receiver or a CD-i player.

- If the external unit transmits a control signal, this is recognized by the video recorder and this switches automatically to the view mode.
  You can switch the view mode on and off with the [MONITOR] button.
- Even when the video recorder is switched off, the Scart connection between the TV set and the external unit is maintained.

> Notes:
> * If the programme position "E1" or "E2" is selected, the video recorder cannot switch in the view mode. This also applies for programme positions with activated decoder function.
> * This function is only possible if the TV set is equipped for it and a Scart cable is used for the connection.

The TV monitor function

Pressing the [MONITOR] button switches the TV set to the "AV" (= **A**udio/**V**ideo input) programme position. This is useful if you wish to monitor a "running" recording on the picture screen (monitor) of your TV set. For this, the video recorder must be switched on. The video recorder's display indicates briefly "VCR MON".
A further pressure on the same button switches the monitor function off. The video recorder's display indicates briefly "TV MON".

> Notes:
> * The monitor function is **only** possible if the TV set is equipped for it and a Scart cable is used for the connection.
> * During playback, the [MONITOR] button has no function.

Switching between VCR 1 and VCR 2

This function is very useful if you have two video recorders operating with the same remote control code. So that you always control the "right" video recorder, you simply change the remote control code of this recoder and of this remote control handset.

1. Switch on the TV set and select the programme position intended for the video recorder.
2. Press the [ATS] button on the video recorder. The OSD page "INSTALLATION MENU" appears on the picture screen.
3. Select the option "Special settings". Confirm with the [▶] button.
4. The OSD page "SPECIAL SETTINGS" appears on the picture screen.
5. Select the option "VCR Address". On the picture screen appears the message "To change – alter remote control code first".
6. Press **simultaneously** the numeric button [2] and the [OK] button on the remote control.
   The code of the remote control is changed.
   To undo the change, press the numeric button [1] and the [OK] button.
7. Point the remote control at the video recorder and press **any** button (e.g. [STOP ■]) button on the remote control. The "new" remote control code is sent to the video recorder. In the OSD page appears the indication "VCR2".
   The code of the video recorder is also changed.

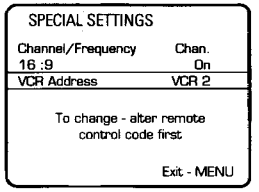

8. Complete the setting by presing the button [MENU] twice.

Playback using the aerial cable

If you do not wish to use a scart cable, you must use the **aerial cable already connected** to play from the video recorder.

❶ Switch on the TV set and select the channel number used for video playback. (This is explained in the operating instructions that accompany your TV set).

❷ Press the video-recorder buttons [EJECT ▲] and [PLAY ►] simultaneously.
The message 'MODULATOR' and 'C36' or '591' will appear on the video-recorder display.

❸ You must now enter and store this channel number or frequency (in MHz) in the TV set.
A 'test picture' appears on the TV screen to indicate that the video recorder is transmitting.

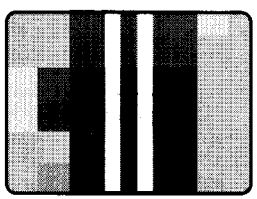

Please consult your TV operating instructions for details on setting and storing the right channel or frequency for your TV set.

Note:
* Check the sound and picture quality of TV reception when playing from the video recorder. If necessary, optimise the picture, colour and sound by re-setting the TV channel.

Information: The UHF-36 TV channel is occupied by your video recorder. It is, however, possible that this channel has been assigned to a different TV station at your reception point. Where this happens, i.e. when one or more TV stations is/are received, the picture quality of TV programmes is reduced. If this happens, proceed as follows:

❹ Check whether all TV channels function exactly as they did before.
If the picture quality of one or more TV channels has disimproved, switch off the video recorder for checking purposes. Check all the TV set's channels again.

❺ If picture interference only occurs when the video recorder is switched on, you must search for a 'free' video-recorder channel.

❻ Press the video-recorder buttons [EJECT ▲] and [PLAY ►] simultaneously.

❼ Press the video-recorder button [FOLLOW TV]. The video recorder searches for a 'free' channel. The message 'MODULATOR' and e.g. 'C44' or '655' appears on the video-recorder display.
Store the setting by pressing the button [OK].

❽ Reset the TV to the video recorder (Step ❸).

❾ If the result is unsatisfactory, you can also enter the channel number or frequency manually.

❿ Search for a free channel on your TV set (screen only flickers).

⓫ Press the video-recorder buttons [EJECT ▲] and [PLAY ►] simultaneously.
Using the buttons [▼] or [▲] or the digit buttons [0 – 9], enter the 'new' channel number or frequency of your TV set. You will see the test picture.
Store the setting by pressing the button [OK].

⓬ Check all channels on the TV set again. Repeat the setting (steps ❿ and ⓫) until such time as you can no longer detect a difference in the picture between when the video recorder is switched on and when it is off.

⓭ Switch off the video recorder by pressing the button [LOW POWER ⏻].

Note:
* If you interrupted the setting described in Chapter 2 'INSTALLATION', continue with initial installation.

Switching the built-in modulator on and off

In the previous section, possible TV reception inteference was discussed. If picture/sound interference **can not be eliminated** using the methods mentioned, the built-in modulator can be switched off. "Playback via the aerial cable" is **no longer possible** when the modulator is switched off.

❶ Press the buttons [EJECT ▲] and [PLAY ►] on the video recorder simultaneously.

❷ Press the remote control button [►] **for more than five seconds.**
A message, e.g. "MODUL", appears in the video recorder display.

❸ Press the remote control button [►] again **for more than five seconds.**
A message, e.g. "MODUL OFF", appears in the video recorder display.

❹ Store the setting by pressing the button [OK].

Note:
* If your TV set has the "Easy Link" function, and the TV set and video recorder (scart socket [1 EXTERNAL / EURO-AV 1]) are connected with the special scart cable supplied, the modulator is automatically switched off.

Remote control of TV sets

This remote control is equipped to deal with several companie specific remote control codes for TV sets. Using the appropriate **code digit** and the **TV** button block, the volume can be adjusted, the TV sound can be switched to 'mute', the programme number selected and the TV set switched off.

[TV ◢ +/–] TV volume +/-
[TV 🔇] switch TV sound on/off
[TV ⏻] switch off TV
[TV P +/–] select TV programme number +/-

Note:
* Perfect functioning for all models can not be guaranteed in the case of Panasonic, Sony, Radiola and Schneider TV sets.
* If the selected code does not function for your TV set, or if you can not find the manufacturer of your TV in the list, you can go through all the codes one by one.

❶ Hold the remote control towards the TV set.

❷ Press the appropriate TV button and digit button **simultaneously**.

❸ Switch off your TV set.
The "new" remote contol code is now loaded by the TV set.

Here is a list of a few manufacturers:

Code digit	TV manufacturer
0	Philips, Radiola (F), Schneider (F),
1	Grundig
2	Panasonic
3	Panasonic
4	Sony

Dismantling Instructions

General guidelines for dismantling the housing components, the electronics and the drive.

Always disconnect from mains before dismantling or assembly.

Due to supply voltages (hot circuit) on the input side of the switched-mode power supply, an isolating transformer must be used to operate the unit.

The drive or the drive - motherboard combination may not be lifted by holding the cross struts of the lift!

To detect power supply faults, we recommend the use of a variable transformer.
After assembling the unit, check for the earthing screw (M) on the underside of the housing.

In mode 10 of the service test program, the set also functions without drive. (Activate by pressing STOP on the remote control and PLAY on the set, followed by SELECT, input of the mode no., confirmation with SELECT). In this mode, the signal flow can for instance be followed up to the socket of the scanner.

Teletext sets are also operational with the Teletext board removed. After a Power-On Reset, the control microprocessor automatically detects whether the Teletext board is plugged in or not.

S-VHS sets have a special mode in which the set can be operated without the S-VHS PCB plate or drive. In this case the video signal on the In/Out print is connected directly from the Frontend to the output. To call up the function in the service test program, select mode no. 12.

1. Housing cover (Fig. 1,2)

- Remove screws A,B,C and D with Torx screwdriver
- Push centre of housing cover sides on underside approx. 1 cm outwards and lift the housing cover back over the three latch positions.
- Move cover up at least 4 cm.
- Remove housing cover.
  Assemble in reverse order.

2. Base plate (Fig. 3)

Preparation:

Remove housing cover as described in section 1.

- Turn the set upside down
- Unscrew the four support feet.
- The base plate can be lifted after unlocking the nine snap hooks (S1-S9) from left to right.

3. Front panel (Fig. 4)

Preparation:

Remove housing cover as described in section 1.

- Push both snap holders (P1) outwards and tilt panel top forward up to stop (approx. 3mm).
- Then release both snap hooks on the top (P2).
- Finally, release the three snap hooks (P3) on the underside and remove front panel by pulling it forward.

Installation:

- Insert front panel parallel to the operating PCB until snap hooks engage.
- Connect lift flap lever to guide of lift flap.

Important!

- Check whether all snap hooks are engaged!

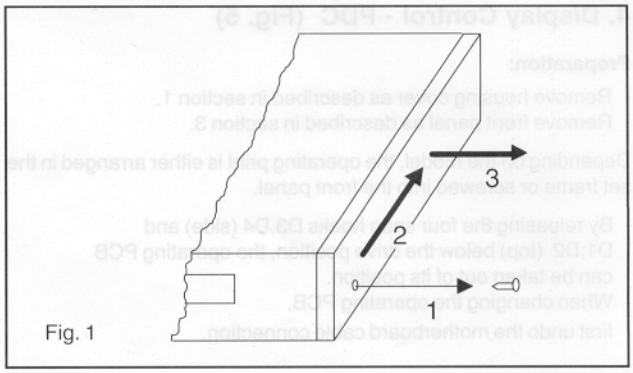

Fig. 1

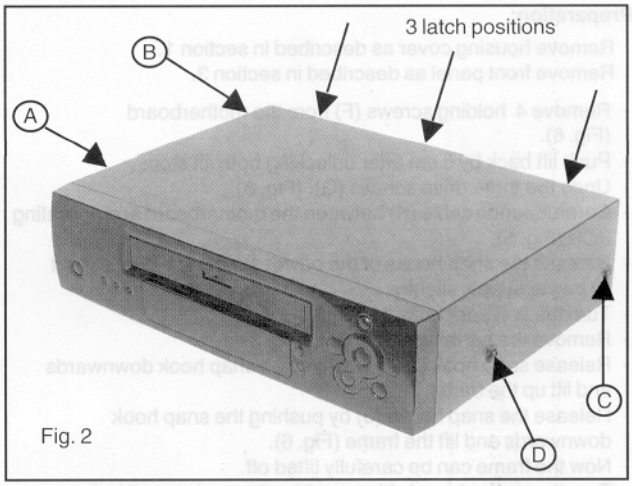

Fig. 2

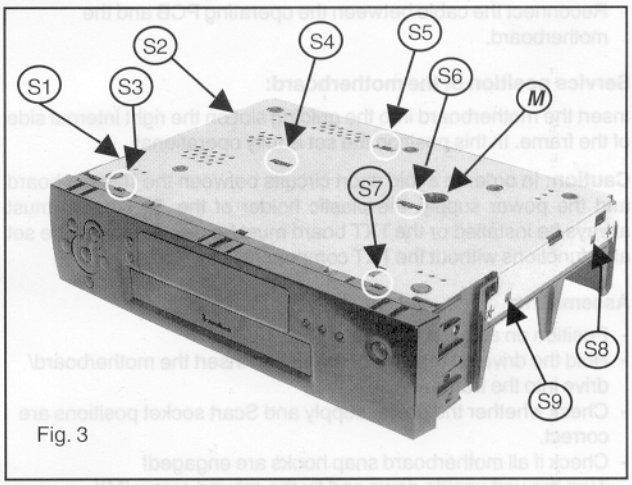

Fig. 3

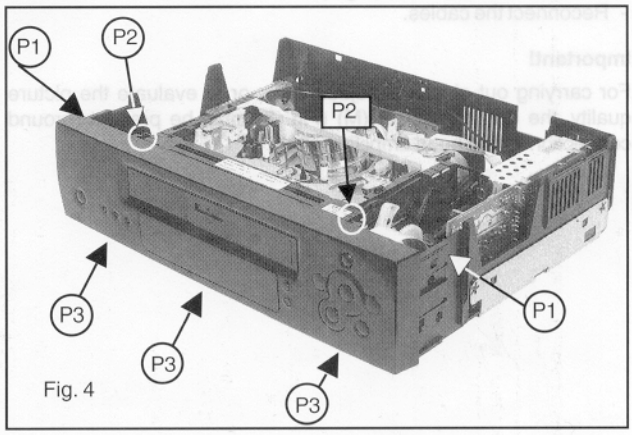

Fig. 4

4. Display Control - PDC (Fig. 5)

Preparation:

- Remove housing cover as described in section 1.
- Remove front panel as described in section 3.

Depending on the model, the operating print is either arranged in the set frame or screwed into the front panel.

- By releasing the four snap hooks D3,D4 (side) and D1,D2 (top) below the drive position, the operating PCB can be taken out of its position.
- When changing the operating PCB, first undo the motherboard cable connection.

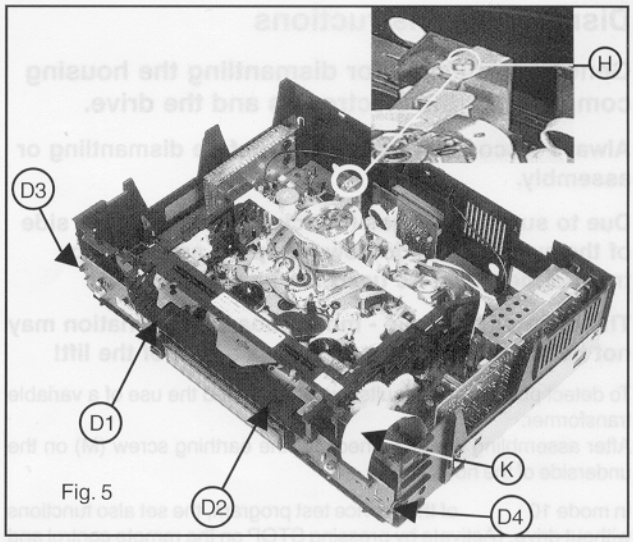

Fig. 5

5. Dismantling the motherboard-drive combination

Preparation:

Remove housing cover as described in section 1.
Remove front panel as described in section 3.

- Remove 4 holding screws (F) from the motherboard (Fig. 6).
- Push lift back by 5 cm after unlocking both lift stops.
- Undo the three drive screws (G), (Fig. 6).
- Carefully undo cable (K) between the motherboard and operating PCB (Fig. 5).
- Release the snap hooks of the power supply (1) (Fig. 6) and lift power supply slightly.
- Turn the unit upside down (Fig.3).
- Remove the earthing screw (M), (Fig. 3).
- Release snap hook (2) by pushing the snap hook downwards and lift up the frame.
- Release the snap hooks (3) by pushing the snap hook downwards and lift the frame (Fig. 6).
- Now the frame can be carefully lifted off.
- Turn the motherboard-drive combination and place it in the service position (Fig. 7) if necessary. The set can be operated in this position.
- Reconnect the cable between the operating PCB and the motherboard.

Service position of the motherboard:

Insert the motherboard into the guiding slot on the right internal side of the frame. In this position the set is fully operational.

Caution: In order to avoid short circuits between the Teletext board and the power supply, the plastic holder of the TXT board must always be installed or the TXT board must be disconnected (the set also functions without the TXT component)

Assembling:

- Position on an even surface
- Hold the drive on the side of the lift and insert the motherboard/ drive into the frame.
- Check whether the power supply and Scart socket positions are correct.
- Check if all motherboard snap hooks are engaged!
- Turn the unit upside down and fix the ground screw (M)!
- Fix screws (F), if applicable (Fig. 6).
- Fix the drive screws (G) (Fig.6).
- Reconnect the cables.

Important!

For carrying out electrical adjustments, or to evaluate the picture quality, the earthing screw (M) (Fig. 3) must be present (ground connection for the head amplifier).

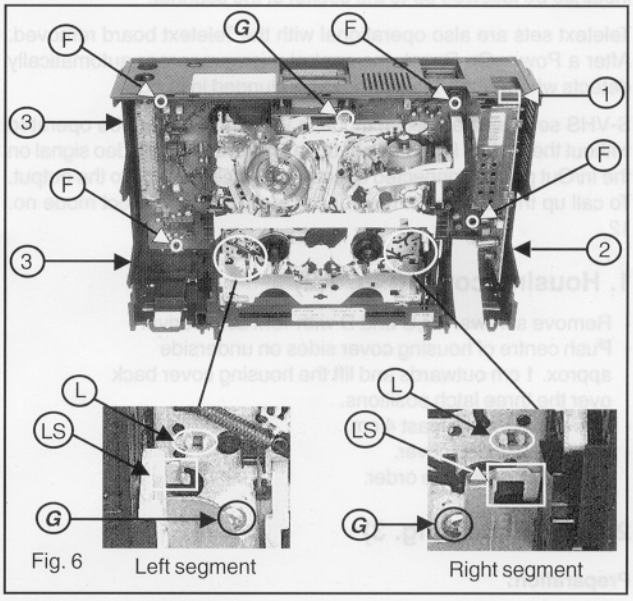

Fig. 6 Left segment Right segment

Service position

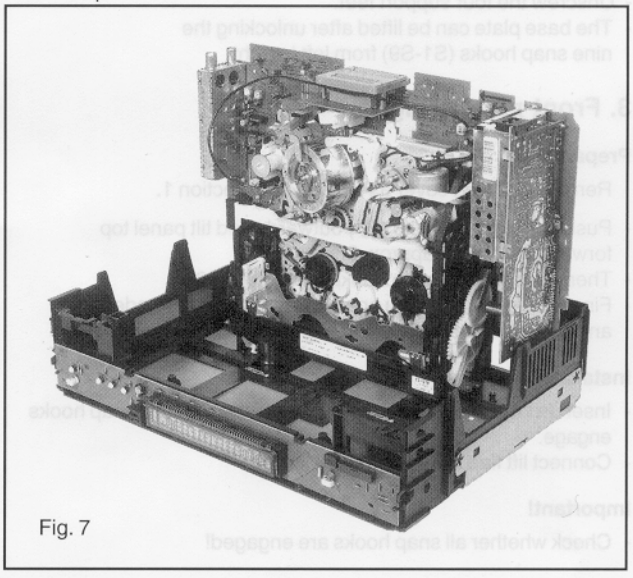
Fig. 7

6. Dismantling the drive

Preparation:

Remove housing cover as described in section 1.
Remove front panel as described in section 3.

- Position set upside down.
- Undo earthing screw of drive M (Fig. 3).
- Return unit to initial position.
- Push lift back by 5 cm after unlocking both lift stops.
- Undo the three drive screws G (Fig. 6).
- Position lift up to the stop in the 'Eject' position.
- Undo screw H with Torx screwdriver 8. (Fig.5)
- Carefully undo all cable connections to the motherboard.
- Slightly lift the left rear side of the drive to undo the plug-in connection.
- Loosen both snap hooks with pliers (L) and lift up the drive around the snap hooks (Fig. 6).
- The drive can now be released from the motherboard (Fig. 8).

Important!

Push back the shielding of the cable to the scanner nearby the screw (H) approx. 1cm. (Fig.4).

Assemble in reverse order.

Important!

Push back the shielding of the cable to the scanner nearby the screw (H) approx. 1cm. (Fig.4).
Position drive parallel to motherboard on left guiding pin of frame.
Check if all snap holders are engaged.

7. S-VHS PCBs

In mode 12, the set is operational without S-VHS board and drive (the video signal is connected through from the Frontend to the output sockets).

Service position:

- After undoing both screws holding the board supports on the motherboard, the S-VHS boards can be removed.
- Remove Transcoder board from the S-VHS board and connect using adapter PCBs.
- Replace flexible 18-pin cable 1526 by longer cable contained in the service kit.
- Install the two board holders of the VHS - board in the adapter PCB.
- Plug in the S-VHS board in the motherboard by means of the adapter (fig 9.)

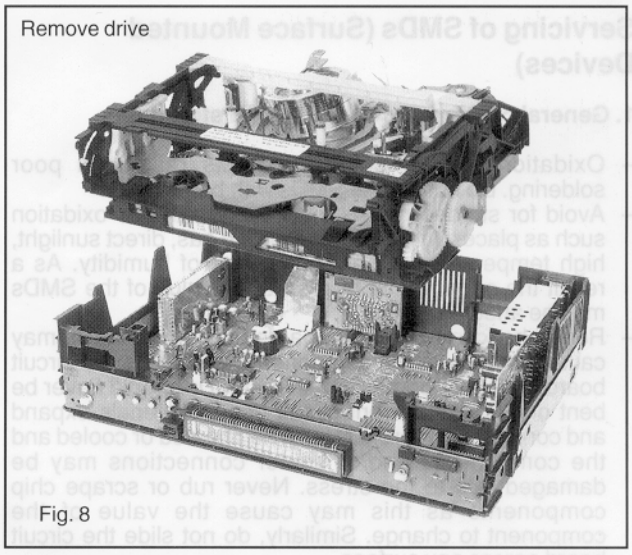

Fig. 8

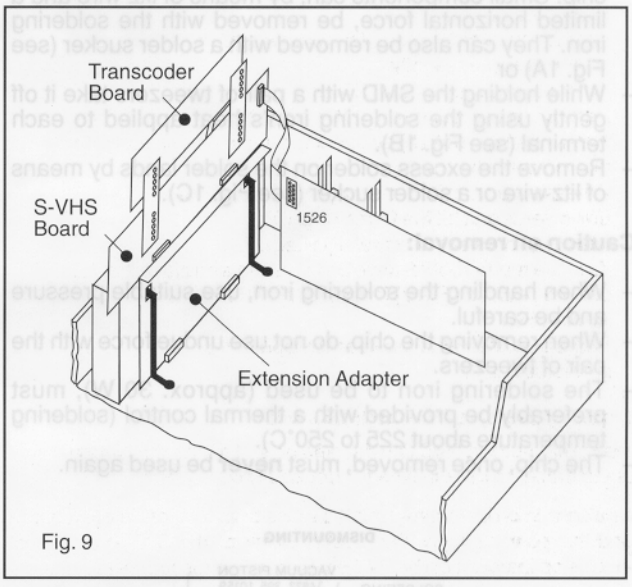

Fig. 9

Servicing of SMDs (Surface Mounted Devices)

1. General cautions on handling and storage.

- Oxidation on the SMDs terminals results in poor soldering. Do not handle SMDs with bare hands.
- Avoid for storage places that are sensitive to oxidation such as places with sulfur or chlorine gas, direct sunlight, high temperatures or a high degree of humidity. As a result the capacitance or resistance value of the SMDs may be affected.
- Rough handling of circuit boards containing SMDs may cause damage to the components as well as the circuit boards. Circuit boards containing SMDs should never be bent or flexed. Different circuit board materials expand and contract at different rates when heated or cooled and the components and/or solder connections may be damaged due to the stress. Never rub or scrape chip components as this may cause the value of the component to change. Similarly, do not slide the circuit board across any surface.

2. Removal of SMDs

- Heat the solder (for 2-3 seconds) at each terminal of the chip. Small components can, by means of litz wire and a limited horizontal force, be removed with the soldering iron. They can also be removed with a solder sucker (see Fig. 1A) or
- While holding the SMD with a pair of tweezers take it off gently using the soldering iron's heat applied to each terminal (see Fig. 1B).
- Remove the excess solder on the solder lands by means of litz wire or a solder sucker (see Fig. 1C).

Caution on removal:

- When handling the soldering iron, use suitable pressure and be careful.
- When removing the chip, do not use undue force with the pair of tweezers.
- The soldering iron to be used (approx. 30 W), must preferably be provided with a thermal control (soldering temperature about 225 to 250°C).
- The chip, once removed, must **never** be used again.

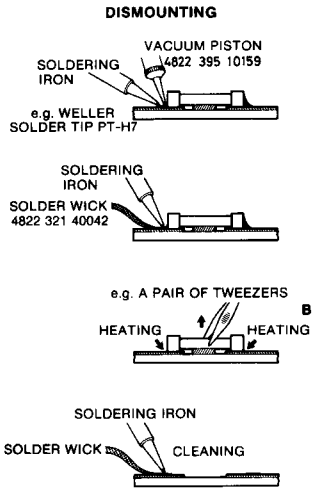

Fig. 1

3. Attachment of SMDs

- Locate the SMD on the solder lands by means of tweezers and solder the component at one side. Ensure that the component is positioned well on the solder lands (see Fig. 2A).
- Next complete the soldering of the terminals of the component (see Fig. 2B).

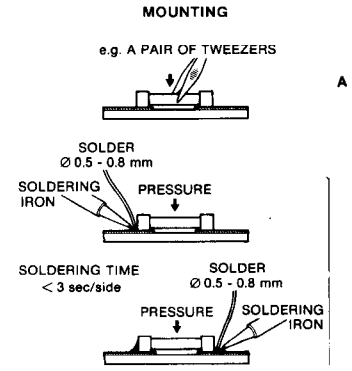

Fig. 2

Caution on attachment:

- When soldering the SMD terminals, do not touch them directly with the soldering iron. The soldering must be as quick as possible; care must be taken to avoid damage to the terminals and the body itself.
- Keep the SMD's body in contact with the printed board when soldering.
- The soldering iron to be used (approx. 30 W) must preferably be provided with a thermal control (soldering temperature about 225 to 250°C).
- Soldering should not be done outside the solder land.
- Soldering flux (of rosin) may be used but should not be acidic.
- After soldering, let the SMD cool down gradually at room temperature.
- The quantity of solder must be proportional with the size of the solder land. If the quantity is too great, the SMD might crack or the solder lands might be torn loose from the printed board (see Fig. 3).

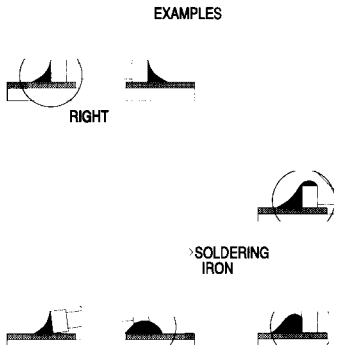

Fig. 3

Flatpack replacement

TOOLS TO BE USED

DISMOUNTING

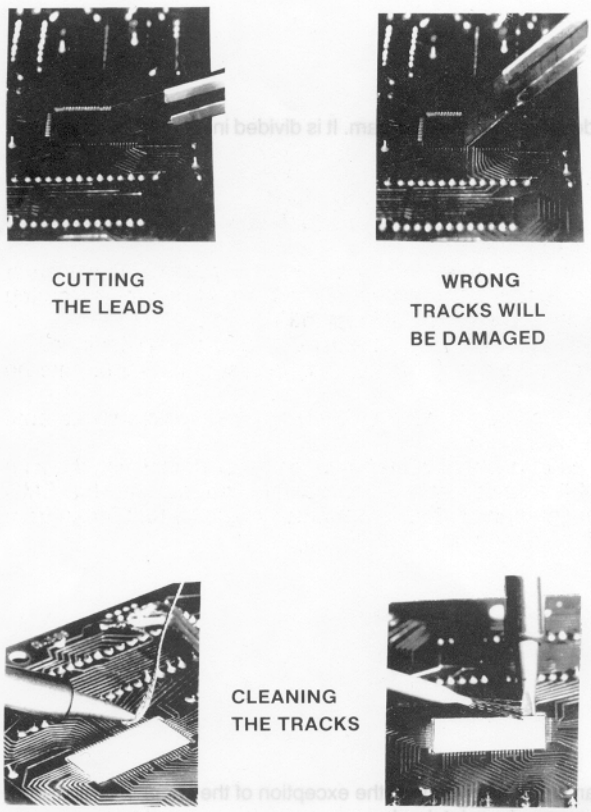

MOUNTING

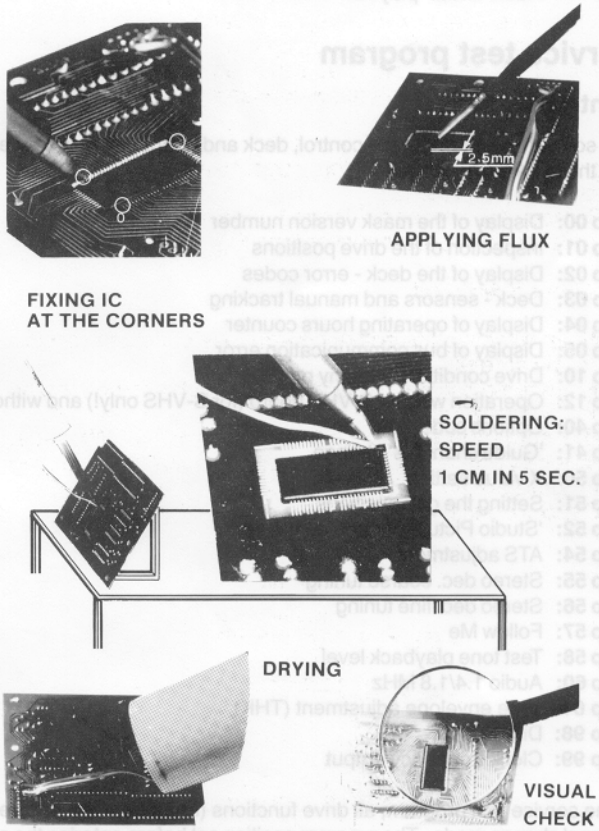

ALIGNING THE LEADS

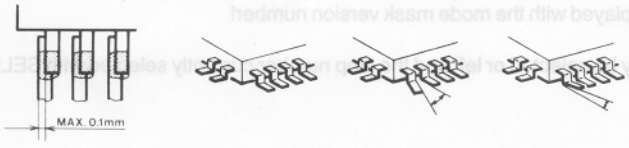

SOLDERING

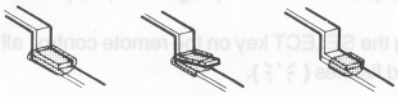

Tools for error diagnosis

Erasing the EEPROM

Disconnect from mains

Press and hold down the Standby key, reconnect to mains and keep the Standby key depressed until the display illumination is switched off (approx. 8 sec.)

All EEPROM data will then be erased and initialised (timer and transmitter channels). The internal processor Ram is also erased, but the option codes, deck parameters, operating hours counter, fast finder and adjustment values are maintained.

After changing the EEPROM

the following steps must be carried out:

Step 40: Option code - entry
Step 41: Guide channels
Step 51: Setting the gap positions
Step 52: 'Studio Picture control' adjustment
Step 54: ATS adjustment
Step 55: Stereo dec. coarse tuning
Step 56: Stereo dec. fine tuning
Step 58: Audio linear playback level

Service test program

1 Introduction

The software program for the control, deck and operating microprocessors includes a service test program. It is divided into the following steps, with the following 'modes':

Step 00: Display of the mask version number
Step 01: Inspection of the drive positions
Step 02: Display of the deck - error codes
Step 03: Deck - sensors and manual tracking
Step 04: Display of operating hours counter
Step 05: Display of bus communication error
Step 10: Drive condition - dummy mode
Step 12: Operation without S-VHS board (for S-VHS only!) and without drive
Step 40: Options code input
Step 41: 'Guide channels' change
Step 50: X value setting
Step 51: Setting the gap positions
Step 52: 'Studio Picture control' adjustment
Step 54: ATS adjustment
Step 55: Stereo dec. coarse tuning
Step 56: Stereo dec. fine tuning
Step 57: Follow Me
Step 58: Test tone playback level
Step 60: Audio 1.4/1.8 MHz
Step 61: Tone envelope adjustment (THK)
Step 98: Display test
Step 99: Clock frequency output

In the service test program, all drive functions (apart from the picture search!) can be carried out, with the exception of the channel search and channel change mode. The program position set before entering the service test program is maintained.

2 Activating the service test program

Press and hold down the STOP key on the remote control. Then press the PLAY key on the recorder and keep it depressed for at least 5 sec. The STOP key on the remote control may be released whilst the PLAY key on the recorder is depressed.
After calling up the service test programme, Step 00 is automatically displayed with the mode mask version number!

By pressing the SELECT key on the remote control, all step modes may be selected or left and the step number currently selected with SELECT appears and flashes ( ).

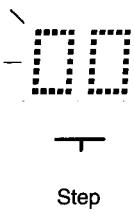

Step

Tools for error diagnosis

Erasing the EEPROM

Disconnect from mains

Press and hold down the Standby key, reconnect to mains and keep the Standby key depressed until the display illumination is switched off (approx. 8 sec.)

All EEPROM data will then be erased and initialised (timer and transmitter channels). The internal processor Ram is also erased, but the option codes, deck parameters, operating hours counter, fast finder and adjustment values are maintained.

After changing the EEPROM

the following steps must be carried out:

Step 40: Option code - entry
Step 41: Guide channels
Step 51: Setting the gap positions
Step 52: 'Studio Picture control´ adjustment
Step 54: ATS adjustment
Step 55: Stereo dec. coarse tuning
Step 56: Stereo dec. fine tuning
Step 58: Audio linear playback level

Service test program

1 Introduction

The software program for the control, deck and operating microprocessors includes a service test program. It is divided into the following steps, with the following 'modes´:

Step 00: Display of the mask version number
Step 01: Inspection of the drive positions
Step 02: Display of the deck - error codes
Step 03: Deck - sensors and manual tracking
Step 04: Display of operating hours counter
Step 05: Display of bus communication error
Step 10: Drive condition - dummy mode
Step 12: Operation without S-VHS board (for S-VHS only!) and without drive
Step 40: Options code input
Step 41: 'Guide channels´ change
Step 50: X value setting
Step 51: Setting the gap positions
Step 52: 'Studio Picture control´ adjustment
Step 54: ATS adjustment
Step 55: Stereo dec. coarse tuning
Step 56: Stereo dec. fine tuning
Step 57: Follow Me
Step 58: Test tone playback level
Step 60: Audio 1.4/1.8 MHz
Step 61: Tone envelope adjustment (THK)
Step 98: Display test
Step 99: Clock frequency output

In the service test program, all drive functions (apart from the picture search!) can be carried out, with the exception of the channel search and channel change mode. The program position set before entering the service test program is maintained.

2 Activating the service test program

Press and hold down the STOP key on the remote control. Then press the PLAY key on the recorder and keep it depressed for at least 5 sec. The STOP key on the remote control may be released whilst the PLAY key on the recorder is depressed.
After calling up the service test programme, Step 00 is automatically displayed with the mode mask version number!

By pressing the SELECT key on the remote control, all step modes may be selected or left and the step number currently selected with SELECT appears and flashes ( ).

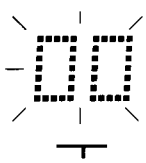

Step

SELECT key on the remote control whilst the Step is flashing, the corresponding mode can be entered or left.
If a step is selected to which no mode is assigned, the displays shows - - and flashes.

To leave the service program, press the STAND-BY key or disconnect recorder from mains.

3 Service mode functions

Endurance test

In the service test program, the recorder can be endurance tested. For this, use a cassette and activate "PLAY" or "REC". The functions are then repeated continuously. In RECORD, the recorder does not move to EJECT at the tape end, but to REWIND, after which it starts RECORD again. This test serves to detect intermittent faults. The last error is stored in the EEPROM. (The fault remains stored even after a power failure.)
The endurance test is ended by pressing STOP or leaving the service test program.

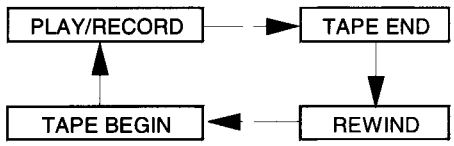

4 Description of steps:

Step 00: Display of mask version numbers

After activating the service test program, Step 00 with the mode mask version number is automatically displayed.

a) After calling up the service test programme, the control microprocessor is displayed,

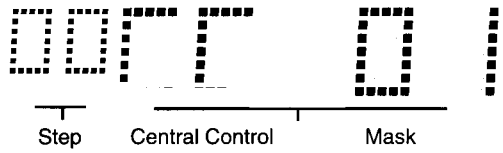

after pressing the "Up" or "Down" key,
b) the deck microprocessor is displayed

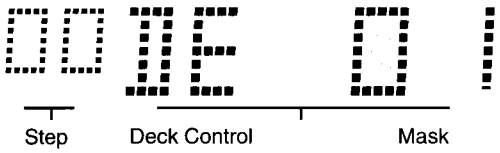

and after pressing the "Up" or "Down" key again
c) the operating microprocessor is displayed.

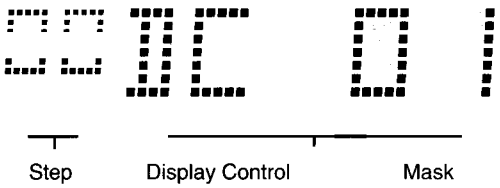

This mode can be left again by pressing the "SELECT" key on the remote control. The currently selected position number appears and flashes on the display.

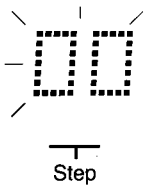

A step between 00 and 99 can now be selected

Step 01: Checking the drive positions

By calling up Step 01, the drive position appears on the display.
The FTA signal from the light barriers controlling the speed of the threading motor is used to check the drive condition.
The drive position is shown as a 3-digit decimal number by counting the FTA pulses on the display.

(e.g. 07 = Eject)

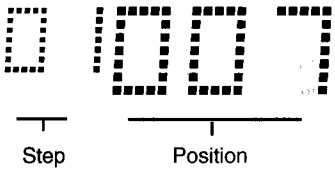

Table of drive positions:

Status	Position (FTA dec.)	Display
Eject	7 +2/-2	OO7
Wind/Rewind	191 +0/-2	191
Stop	200 +4/-4	2OO
Play (Pause)	211 +4/-4	211 [With SWING SEARCH]
	213 +4/-4	213 [Without SWING SEARCH]
Reverse	237 +2/-0	237

Function of the Init switch:

The diagram shows the function of the Init switch, depending on the position of the drive. The number of FTA pulses is important for the position of the drive.

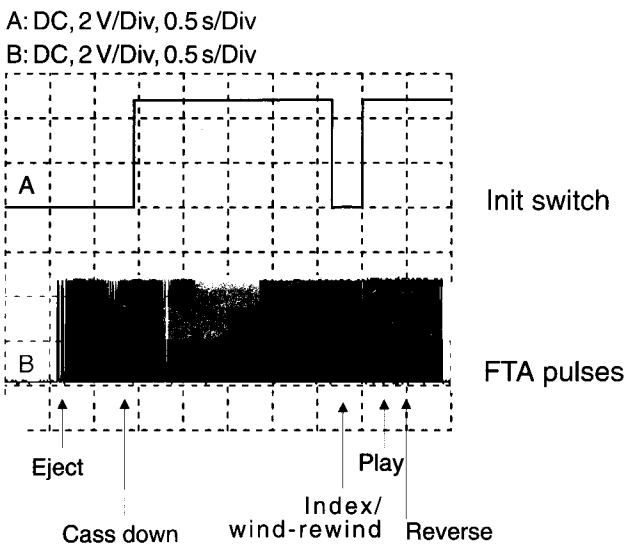

Step 02: Display of the deck error code

By calling up Step 02, the deck error code is shown on the display

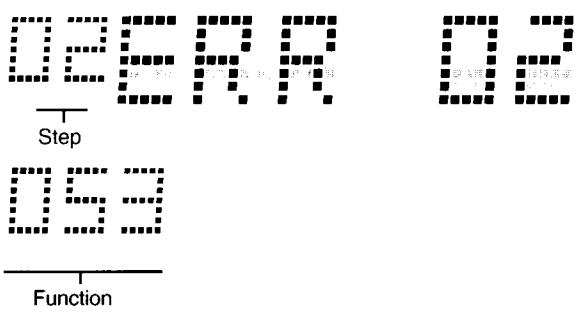

(e.g.: Error 2 = Capstan fault)

Error table

0	no error
1	threading error
2	no capstan pulses
3	tape broken
4	no pulses left reel
5	no pulses right reel
6	head motor error

The bottom 3 digits show the deck fault condition:
(e.g.: 053 = for Play)

Function table:

012	Standby	114	VISS write	211	Slowmotion 1/24
014	Autotracking	115	Viss erase	212	" " 1/14
031	Play-3	125	Tuner - Stopout	215	" " 1/7
034	Slow_reverse	126	Auto Remain Funct.	216	" " 1/2
041	Still Picture	130	ATTS Function	217	" " -1/24
042	Fast	168	Frame+	218	" " -1/14
044	Play-9	169	Frame-	219	" " -1/7
045	Eject	170	Play-11	220	" " -1/2
046	Play9	171	Play-7	222	Edit Record
047	Play-1	172	Play-5	223	Align of Gap
048	Pause	173	Play5	238	Pause
050	Rewind	174	Play7	239	SPC align
052	Wind	175	Play11	246	Edit Pause
053	Play	196	Tuner - Eject	247	Slow motion 1/10
054	Stop out	197	Standby Eject	248	" " 1/18
055	Record	199	Audio Dubbing	249	" " -1/10
112	Index next	202	Audio Dubb. Pause	250	" " -1/18
113	Index previous	206	Reset Tapecounter	253	Key Released

The error code can be reset with the CLEAR key.

Checking the drive functions:

Threading and unthreading time
The signal of the photoelectric barrier which controls the revolutions of the threading motor is used as a reference for the threading and unthreading time.

Stopping of the left or right winding disk
The tacho signals of the left (WTL) and right (WTR) winding disks are used as a control reference.

Stopping of the axial head motor
This is monitored with the PG/FG signal. The signal is discharged from the e.m.f. of the non-conducting spools of the axial head motor, showing the position of the head cylinder.

Capstan motor fault
This is monitored with the capstan tacho signal.

If one of the above sensor signals is not available, the recorder tries to put the lift in the "EJECT" position.

Explanation of deck error code and deck error status
The last error code is stored and remains in the EEPROM, even if the recorder is disconnected from the mains.
The error code can be erased by pushing the CLEAR key on the remote control during the service mode.

Step 03: Deck sensors and manual tracking

By activating Step 03, the deck sensors will be displayed in one digit as either 1 or 0.

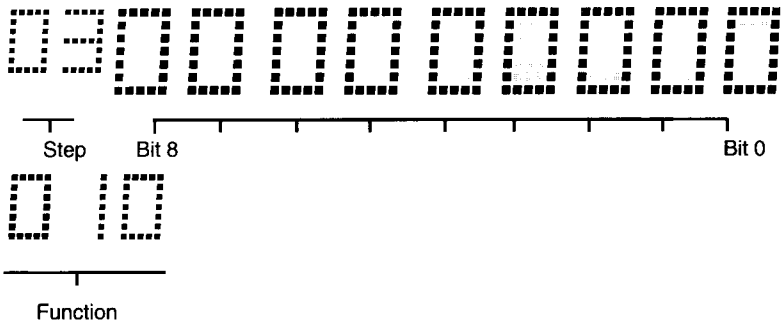

Bit 0 .... Tape end
Bit 1 .... Tape start
Bit 2 .... Record protection switch
Bit 3 .... Tacho right
Bit 4 .... Tacho left
Bit 5 .... Init switch
Bit 6 .... Threading tacho
Bit 7 .... S-VHS switch (only for S-VHS!)
Bit 8 .... —

In the service test program, the tracking is always set to the centre position. Only in this step can the value for the required tape operation setting be changed with the UP / DOWN keys.
After leaving the mode by pressing the SELECT key, the tracking value always resets itself to the centre position and cannot be changed.

Step 04: Display of the operating hours counter:

By activating Step 04, the operating hours counter shows how many hours the head disk has turned. The hours are displayed as a 4-digit decimal number.

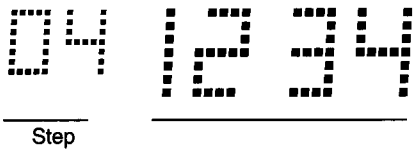

Step 05: Bus communication error display and other detectable errors

By activating Step 05, the error code of the malfunctioning or missing IIC - component is displayed

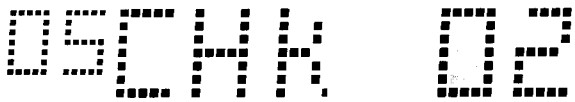

By pressing the DOWN key, all error codes can be selected in succession. If a version does not contain the IIC bus component, this is also shown as an error.

Error code table:

Code	Description	Pos.
00	no error	
01	Tuner	1750 (TM)
02	Modulator	1750 (TM)
05	VPS/PDC	7720 (VP)
06	Teletext	7140 (VT)
07	Audio Processor	7400 (AU)
08	Video Matrix	7200 (IO)
09	NICAM	7200 (FE)
10	Stereo Decoder	7100 (FE)

If the EEPROMs 7024, 7025 are defective the main controller does not start up and the display remains dark (there is acitivity on the IIC bus)
If the audio processor does not recognise the head change-over pulse HI-S (HP2), the display shows "CARR ERROR".

Step 10: Operation without drive - dummy mode

Enter the mode by pressing the SELECT key. All motors are then switched off and the sensors will be ignored by the deck microprocessor. The drive can now be dismantled from the motherboard (see dismantling instruction). **Only install drive with the recorder disconnected from the mains!** For signal tracking, the recorder can be set to all drive conditions, i.e. signal electronic, audio and IO processing are switched to the corresponding operating mode.

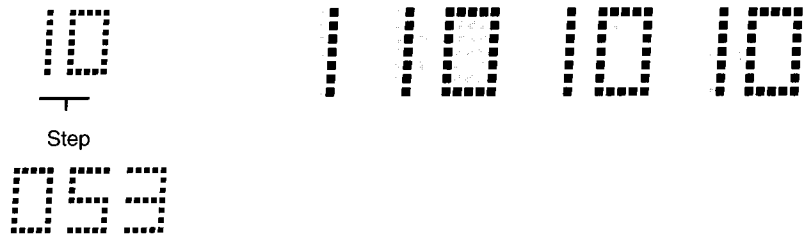

Step 12: Operation without S-VHS board (for S-VHS only!) and without drive

Dismantle S-VHS hardware and drive; connect set to mains. This step connects the front end signals to the E1 socket. Leave the step by a mains reset.

Step 40: Option code input

If, as part of repair work, a new EEPROM is installed, it has to be initialised.
After activating Step 40, option A appears in the display.

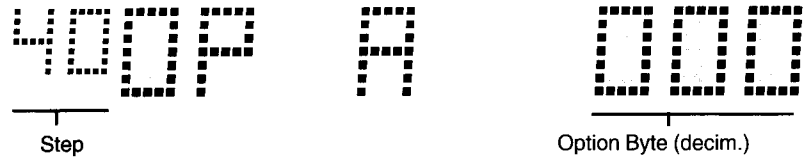

The available options can be selected with the UP and DOWN keys.

By entering a 3-digit decimal code, the correct options (features) are set. The codes are listed on the type sign on the set. After pressing the "OK" key, the entered code is saved and "Ready" appears on the display for approx. 5 sec.

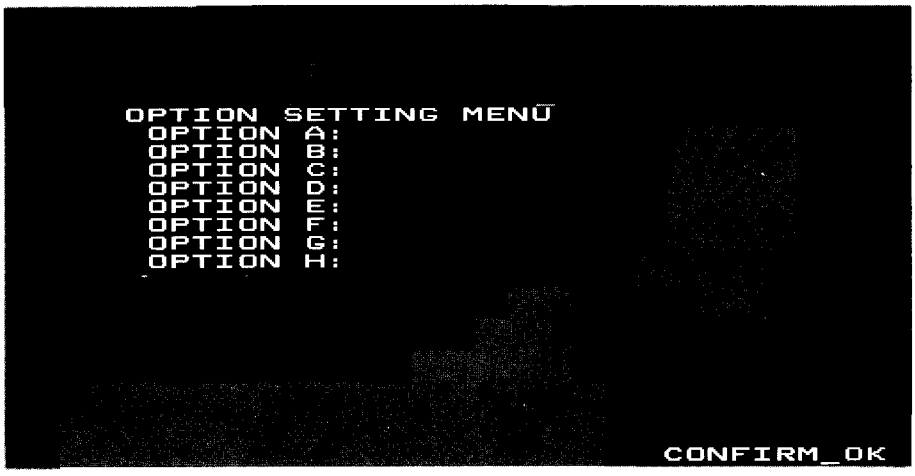

By using the "CLEAR" key on the remote control, incorrectly entered values can be cancelled.

Step 41: "Guide channel" changes (guide numbers)

After activating Step 41, guide channels can be assigned to a program number between 1 and 99. Select a guide channel between 001 and 255 with the UP or DOWN keys and enter a program number for the selected channel with the numerical keys.
More than one guide channel may be assigned to a program number.

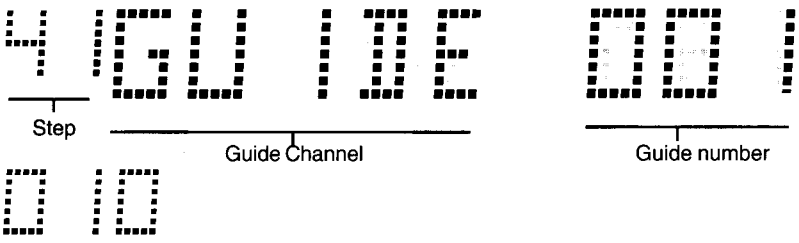

Program no.

The value can be erased at any time with the "CLEAR" key and stored with the "OK" key.

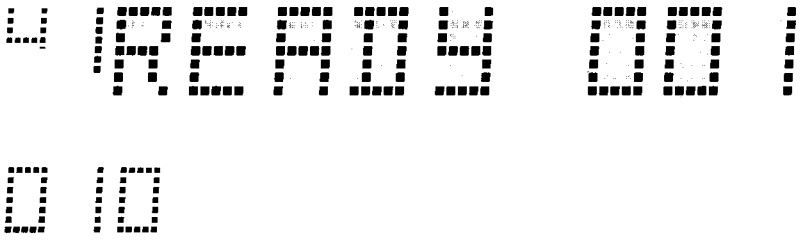

Program no.

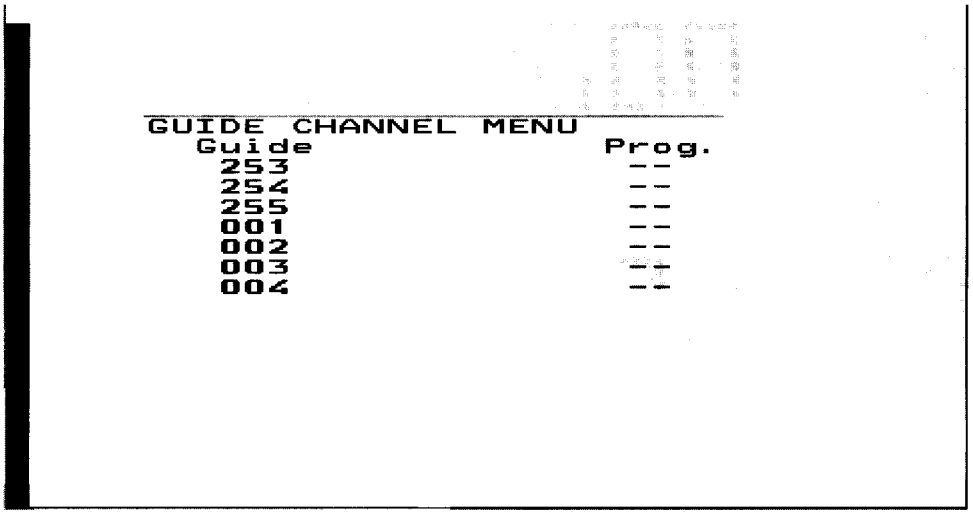

Step 98: Display Test

After activating Step 98, all display sections are illuminated with half the brightness.

Circuit descriptions

1. Power Supply PSM (PS)

Technical data:

Supply voltage	: 187 - 264 Vrms
Max. output	: 50 W
Switching frequency	: 100 kHz
Efficiency	: 78 % at max. output

Operational principle (blocking oscillator principle):

During the conductive phase of switching, transistor energy passes from the supply to the transformer. This energy is then passed on to the load during the blocking phase. Regulation is achieved by varying the switch-on time and the frequency of the drive waveform. The energy passed on in every cycle is regulated so that the Power Supply output voltages do not vary under changing load or with Mains input voltage variations. Integrated circuit [7020] has over all control of the PowerTransistor.

LOW STANDBY MODE: (PSM2/3/2B)
The Power Supply operates in Burst Mode. The power consumption is less than 1Watt. Only the 5VSTBY remains.

STAND BY MODE: (PSM2A/2AF/1/1B)
The Power Supply operates at a controlled low frequency of approx. 50 kHz. This minimises switching losses.

POINT OF REVERSAL:
At this point of the output characteristic, the transferred output will be at maximum.

OVERLOAD:
The power supply operates in Burst-Mode. The energy of every cycle is limited. In this case the Power Supply outputs will be low.

Circuit description:

The supply voltage is firstly filtered by the components around coil [5010], is then rectified by bridge rectifier [6050] and screened by capacitor [2070].
Electrolytic capacitor [2036] charges via [3050, 3052] and provides the initial start up voltage for the IC [7020]. After the start-up phase the Power Supply maintaining voltage is produced by transformer winding 4-3 and by Diode [6036].
During activation of the switching transistor, a current flows from the rectified supply voltage through the primary winding of the transformer, through Transistor [7040] and then through resistors [3048, 3046] to ground.
As the positive voltage at pin 9 of the transistor is constant (in this example), the current rises linearly, forming a ramp which is dependent on the supply voltage and the inductivity of the primary winding.
A magnetic field will then be formed in the transformer. This current represents a certain energy quantity. During this time, voltages will be produced on the secondary side of the Transfomer. These voltages will be polarised in such a way so that the secondary Diodes block. A voltage image of the primary current is then applied to the IC [7020] at pin 7 via resistors [3048, 3046, 3026], This image voltage is then checked and on reaching a certain value - dependent on the control voltage at pin 14 of the IC, Transistor [7040] will be switched off.
Once the switching transistor has switched off, no further energy will be transferred to the transformer. The transformer inductivity now attempts to keep the current which has flown through the transformer at a constant level (u=L*di/dt). The current decreases,di/dt becomes negative. Consequently the polarity of the voltages present on the transformer reverses, causing a current to flow through the secondary winding of the transformer, through the diodes, the electrolytic capacitors and on to the load. This current is also ramp-shaped, but decreasing (See fig. 1).
The circuit supply is controlled by changing the conductive phase of the switching transistor, so that either more or less energy is passed into the transformer from the supply. The control information stems from reference element [7074], this will compare the 5V to an internal reference voltage of 2,5V. The control information for 7074 passes via an optocoupler to pin 14 of [7020] for galvanic isolation. The IC [7020] compares this voltage to an internal reference. The resulting value changes the level at which the voltage at pin 7 of the IC (image of primary current) is compared. The voltage at pin 5 of the IC serves as fold-back control during overload conditions.
The maximum removable secondary output is determined by [3048, 3046]. At a certain voltage (normally 1V) at pin 7 of the IC the power supply will pass to the reversal point. The circuitry at pin 11 is optional. The start-up phase is carried out with shortened pulses using by using 2014, the switching frequency in this case will be outside the audible range. The secondary side of the Transformer produces seven voltages. These voltages are rectified by [6076, 6082, 6081, 6092, 6080, 6088, 6098 (Y6096)].

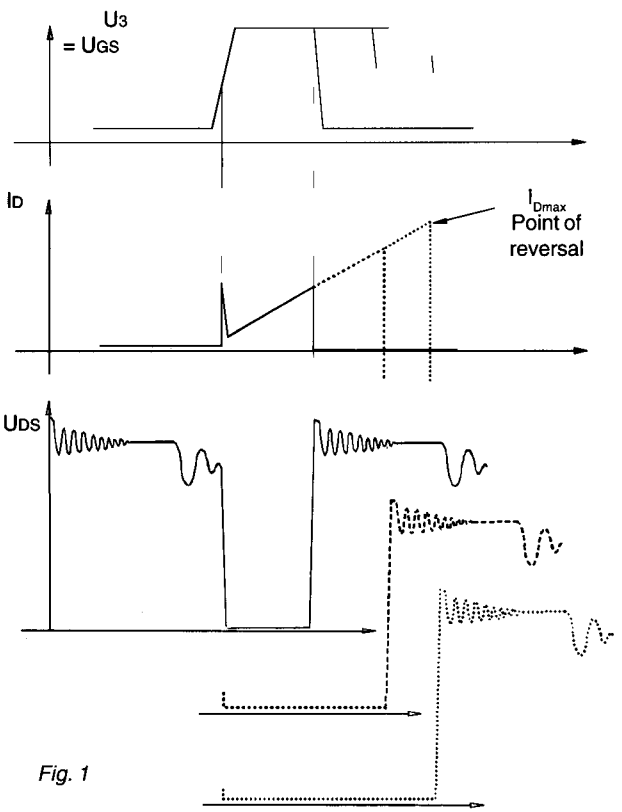

Fig. 1

The Display heating supply is an alternating current and is produced by transistors [7058, 7060]. Transistor [Y7090] switches the motor supply 8/17M.
(PSM2/3 only): Transistor [7050] together with resistor [3071], influences the control loop for the 5V supply voltage. This combination produces the effect of the 5V voltage [7020] being high (via the optocoupler[7070], which causes the IC to switch to BURST MODE (See 1.4 Nominal, overload and standby operation) . A high level on STBY (Pin 18 of pin strip [1519]) switches the power supply to LOW STANDBY MODE. The IC]7085] stabilizes the 5VSTBY voltage, which is unable to supply more than 1mA.

Description of start-up phase

After connection to the Mains supply the following voltages are produced. The start up sequence will now be described. (see Fig. 2).
At time t0: Vcc (pin 1) is presented with a half-wave charge via resistors [3050, 3052], the V_{cc} Start voltage. The current consumption is in this state is 0.3 mA (normal!). The internal reference voltage (V_{ref} IC 7010) will be activated when the Vcc Start voltage reaches approx 13V. The internal oscillator will now start up. The oscillator frequency is determined by the capacitor conected at pin 10 of the I.C. (approx. 100 kHz) In the loaded state this can lead to an increase of current consumption up to 17mA.
The voltage at pin 11 rises linearly (Soft Start). The IC will start up with shortened pulses until pin 11 has reached a voltage of 2.4V.
If V_{cc} falls below the limit V_{dis2} or if (through a fault in the regulation loop) V_{cc} rises to V_{ccprot} (typ. 16V) before the reversal point is reached, the start-up sequence will be stopped (pin 3 is disabled)

and the IC will be (V_{ref}) switched off . Vcc will rise by a half-wave charge. A new start-up cycle will then begin.

Nominal, overload and standby operation

After start-up, the IC [7020] lies inside the normal control range. The voltage at pin 14 is normally 2.5V. A secondary load rise will cause a increase in the switch-on time of the Transistor. As a consequence of the increase in load, the peak voltage value at pin 7 of the I.C (drain current image) will also increase. If the load further increases to a pre determined level, the overload amplifier inside the IC will reduce the pulse width to the so-called reversal point. (at typ. 1V on Pin7)
The IC supply voltage V_{cc} will behave in the same way as the secondary output voltages. Consequently V_{cc}, will also decreases with increasing load.
During this condition $V_{cc} < V_{dis1}$ (approx. 9V) the IC will change in to the so called Burst Mode (query operation). The fault power condition output will be low, as the interval between half-wave starts will be

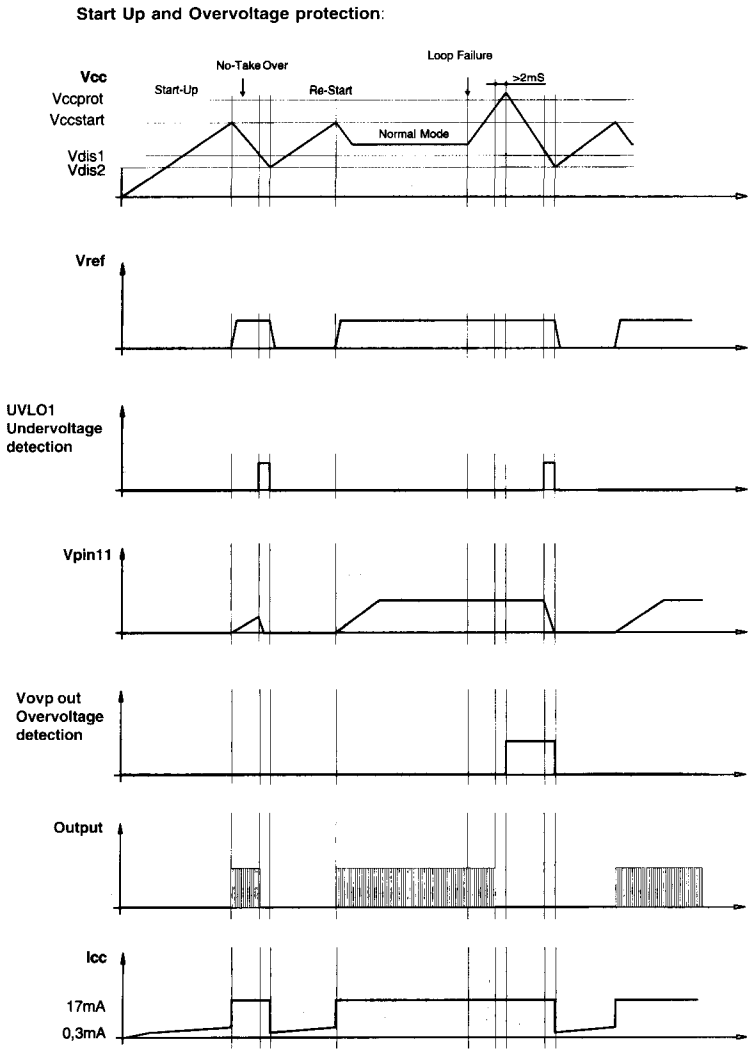

Bild 2

long. A reducing load will shorten the on transition time .If the load drops further at a certain threshold, the IC will switch the frequency back to approximatly 50 kHz (Standby mode) via pin 7 (depending on the connections at pins 12, 15).
This keeps any switching losses in the transistor to a minimum.

Over temperature

The IC [7020] has a built in over temperature sensor, blocking by the use of internal llogic the drive waveform if excessive IC temperatures are produced (typically 155°C). When the temperature has reduced the power supply will re start.

2. Front End (FE)

The front end serves to amplify and demodulate the tuner signal. It also generates the FBAS and the LF signals:

Mono
Stereo - right; left
Dual tone; tone 1; tone 2

PAL: The IF signal passes from the connector contact IF-IN [1624/10] to the dual surface wave filter [Y1030] (video and audio), where the video and audio signals will be separated.
Multistandard: The IF signal passes from the connector contact IF-IN [1624/10] to the surface wave filter [Y1010, Y1020, Y1030] (video and audio), where the video and audio signals will be separated.
The video signal is passed to pins -(1) and -(2), the audio signal to pins -(27) and -(28) of Y7050. Additional processing of the video and audio signals is also carried out by IC [7050].

2.1 Video processing

The video IF input signal is fed to pins 1 and 2 of [Y7050], the signal is then processed by the following blocks, a controlled wide-band amplifier, a synchronous demodulator (including active carrier regeneration) PLL, a video amplifier and the generation of regulated voltage for the tuner. The CVBS-signal is present at IC [7050-(18)].

PAL: Via an internal buffer stage IC [Y7050-(19), -(8)] and the Sound Trap [Y1110] the CVBS signal is passed to the module output (connector contact [1624-(5)], CVBS-HF).
Multistandard: Via the sound-trap filter [Y1090] and an internal buffer stage IC [Y750-(19), -(8)] the CVBS signal passes to an additional sound trap filter [Y1110] and a chroma amplification stage [7155, Y5159, 3159, Y2159] or to the sound trap filter [Y1100] and then to the output switch [Y7150] and the module output, connector contact [1624-(5)] (CVBS-HF) .

2.2 Audio processing

PAL: The audio IF signal passes from the surface wave filter [Y1030] to IC [7050-(27, 28)]; and then through a internal amplifier. It then passes through a converter [7050]. This converts the sound IF signal to a intercarrier signal (5.5/5.74 MHz). The intercarrier signal is then applied to IC [7050- (17)]. It passes from the IC [Y7050-(17)] via filters [Y1070] (5.5 MHZ), [Y1050] (5.74 MHz) to the FM-PLL demodulators [Y7050-(14), -(15)]. This is then followed by internal buffer amplifiers. The AF1(L) and AF2(R) signals will now be present at pins -(10) and -(11).
Multistandard: The sound IF-signal passes via an audio surface wave filter [Y1010, Y1020] to the audio input of IC [7050-(27, 28)], and via an internal regulation amplifier to a converter [7050]. This converts the sound IF signal to an intercarrier signal (5.5/5.74 MHz) for the FM-sound or directly to an audio-signal for AM-SOUND (standard L) [Y7050-(10)].

Mono

During mono broadcasts only pin 10 of IC [Y7050] will receive a signal. The evaluation circuit in the decoder IC [Y7100], recognises the MONO status and will inform the central controller IC [7300] of this via the I2C bus (pins 1/20), this will set the output selection switches in the IC [7570] to MONO mode. The audio signal will is now present at pins 11 / 12 of the IC. From these two connections the signal is then passed to the I/O switching circuit. (FEL,FER) FM recording. For linear audio recording the audio signal is passed to the audio linear circuit (FEMono) from IC [Y7050-(10)] via T [7143].

Stereo mode

During stereo broadcasts the signals are connected to IC [Y7050] at pins 10 and 11. The R signal (pilot signal amplitude modulated with 117 Hz) is connected to pin 11. The pilot signal passes via the pilot circuit (PAL: [Y2070, Y5070], Multistandard: [Y2130, Y5130] to IC [Y7100] pin 5 and then to the evaluation circuit. This circuit allows

the decoder to recognise the stereo status from the 117 Hz signal and hence informs the central controller by using thed LH2 (Longplay heads) to pins 11 and 9 where the 4 Signals are amplified. The HSC (SP/LP) signal passes on the correct signal at the amplifier outputs of [7600]. At SP HSC is Low. The FM signals of heads SH1 and SH2 are passed on. During LP operation HSC is High and the information from heads LH1 and LH2 is processed further. The HSC signal is passed to pin 21 of IC [7600] via IC [7649]. As the tape information can only be read by one head this means LH1 or LH2 during LP operation and SH1 or SH2 during SPsing the 274 Hz signal. The decoder will identify its status to the sequence controller via the I²C bus . Via the I²C bus both channels will then be electronically switched to pins 11 (tone1) and 12 (tone 2) and then finally once again by the via the I²C bus to the audio (AU) switching circuit.
FER=FRONT END RIGHT
FEL=FRONT END LEFT

3. PCB-Head amplifier (HC)

Operational overview

The Video head amplifier passes the image signals to the rotating transformers. The signals are then written to tape by the video heads or read out by the same.

3.1 Playback:

The mutual SHC and LHC points of the transferring coils are earthed by switches SW-SP and SW-LP (both in IC [7600]). Switches SW1-SP, SW2-SP, SW1-LP and SW2-LP (in IC [7600]) are open. For playback 2 heads are available for LP and SP. The FM information on the tape pass via SH1 and SH2 (Shortplay heads) to pins 6 and 4 of the video head amplifier [7600] and from LH1 and LH2 (Longplay heads) to pins 11 and 9 where the 4 Signals are amplified. The HSC (SP/LP) signal passes on the correct signal at the amplifier outputs of [7600]. At SP HSC is Low. The FM signals of heads SH1 and SH2 are passed on. During LP operation HSC is High and the information from heads LH1 and LH2 is processed further. The HSC signal is passed to pin 21 of IC [7600] via IC [7649]. As the tape information can only be read by one head this means LH1 or LH2 during LP operation and SH1 or SH2 during SP operation. The signal HP1 (pulse) IC [7600-20] switches to the reading head. The unregulated FM signal is passed to pin 19 of IC [7600] as FM UK, the regulated FM signal to pin 18 of IC [7600] as FM-CON.

3.2 Search operation:

The SP and LP signals are rectified in [7600] and compared in a comparator. This determines which head supplies the stronger signal. The comparator output (pin 23 of [7600] is passed on as ENVC signal to the deck controller 7085, providing the correct HP1 and HSC signals [7600] for the search operation. ENVC is High for SP signal > LP signal and Low for SP signal <LP signal. Using HSC and HP1, the strongest signal is applied to the output of [7600-(pin 19)], to receive an interference-free picture. The HSC is linked with the CSYNC (in IC [7649]) so that a switch-over can only be made at a line end.

3.3 Recording:

Via resistors [3610, 3611 and 3612] all signals FM>Bd, CH>Bd and SEC-FM (SP mode) are added, showing the relationship of FM>Bd to CH>Bd or FM>Bd to SEC-FM at -12 dB in the summing which is pin [7600/19]. This summing information signal passes at pin 1 into IC [7600], which passes the recording signal to the mutual point (SHC) of the SP head tranformers. Condensor [2616] determines a certain recording frequency for SP-mode. In LP-mode the signals are added via the resistors [3617, 3618, 3619] and then passed to IC [7600] at pin 27, which then passes the signal to the mutual line [LHC] of the head transformer. Condensor [2615] which determines the frequency response in LP-mode.

4. Luminance/Chrominance circuit (VS)

General:

During recording the 4.43 MHz colour signal is converted to 627 kHz with a beat frequency (5.06 MHz). The luminance signal is frequency modulated. During playback the 627 kHz colour signal returns to the original 4.43 MHz colour signal (beat frequency 5.06 MHz). It is then amplified, added to the modulated and dropout compensated luminance signal and passed to the IN/OUT circuit.

4.1 Luminance unit

4.1.1 EE operation

The FBAS input signal passes via pin 7 in IC [7320]. From here it passes through a servo amplifier (AGC), a clamping stage and a video amplifier. The signal is output at pin 11 of IC [7320], passes to an emitter follower (transistor [7335]) and is then passed to the IN/OUT circuit via resistor [3534] .
The C-SYNC comes from pin 9 of IC [7320]. The C-SYNC is gained from the FBAS-IN signal at pin 7 of IC [7320].
In IC [7320] the FBAS signal is filtered by a low pass filter before the AGC amplifier and then clamped. The C-SYNC is then separated and output at pin 9 of IC [7320]. (See 1.4 !)

4.1.2 Recording

The FBAS signal is passed from the IN/OUT circuit to pin 7 of IC [7320] and to the SECAM circuit . In IC [7320] the signal is regulated in the AGC stage. It is then clamped, low pass filtered (3.5 MHz) for chroma suppression and output from IC [7320] at pin 46. The Y signal is passed to an emitter follower (transistor [7300]) and then returned into the IC [7320] at pin 47, where it goes through a clamping stage, a DETAIL ENHANCER and the non-linear Emphasis providing non-linear lifting of high the frequencies. The following MAIN EMPHASIS lifts the high frequency parts of the BAS - signal linearly. This lifting is cancelled during playback. After the MAIN EMPHASIS the black and white values are amplitude limited (W/D CLIP). The signal is then FM modulated and output at pin 44 of IC [7320]. A band pass filter consisting of capacitors [2267, 2268, 2269, 2271, 2273] and inductors [5267, 5269] and [5273], limits the Y-FM range for the low frequency ranges (below 1.0 MHz) for non-interfered Chroma signals. The FM modulated signal (FM<BAND/FM T.T.) is then passed on to the head amplifier switching circuit (HC).
The Y-wrinting current is defined by the adjustable component [3479].

4.1.3 Playback

During playback the regulated FM signal from the tape (FM-CON) is branched after the transistor for luminance processing of SQPB and VHS.

VHS:

For VHS playback the FM signal is passed from the tape to a "Peaking circuit", forming a parallel and a serial oscillating circuit (capacitors [2157, 2159], inductivity [5157]). During serial resonance (5 MHz) the signal passes through unattenuated and during parallel resonance (9 MHz) it is blocked. The the group delay of this signal is corrected with transistor [7165], resistors [3365, 3367, 3369], capacitor [2167] and inductor [5167]. The signal is released from the 627-kHz chroma signal by a suction circuit [2175, 5175] and low pass filtered (capacitors [2181, 2179], inductivity [5179]).
The SEC-W signal switches transistor [7185]. If SEC-W is low, the transistor is conductive. Then the Y-FM signal will be passed to pin 43 of IC [7320]. For the playback of Secam-West recordings SEC-W is high so that transistor [7185] blocks. The signal now passes through a 1.1 MHz rejection filter (capacitor [2185], inductivity [5185]) for colour suppression and is only then passed to pin 43 of of IC [7320]. There the signal is passed to an AGC stage and checked by the Dropout Detector (DOC DET) for level dropouts, exceeding a certain value. If necessary, a pulse is transmitted to the dropout compensation switch (DOC). From here the signal passes through a limiter (DOUBLE LIMIT), a FM demodulator, a low pass (SUB LPF) and the main deemphasis (MAIN DEEMPH). The main deemphasis block the linear lifting of the high frequency is cancelled. At pin 46 the signal leaves the IC [7320]. At this stage the transistor [7280] switches between the VHS and SQPB demodulator identification lines. At pin 47 the signal is passed back into the IC [7320]. After

clamping, it is passed to a low pass filter (Y-LPF), only letting through luminance signals. Furthermore C-SYNC is taken from the signal and then output at pin 9 of IC [7320]. The BAS - signal from Y-LPF is passed to the output stage (ATT) for dropout compensation and then via pin 15 of IC [7320] to pin 7 of IC [7340]. The signal is delayed by one line and passed via pin 9 of IC [7340] to pin 13 of IC [7320]. After VCA amplification it is clamped and passed to the dropout switch. If dropout signals occur, these are replaced by the clean delayed signal by switching the dropout switch. Furthermore the undelayed and delayed BAS - signals are subtracted from one another in a differential amplifier and the resulting low frequency noise voltage is added in antiphase to the undelayed Y signal by an evaluation filter. The noise reduced BAS - signal passes through a non-linear deemphasis block (NL DEEMPH), cancelling non-linear lifting of the high frequencies, a filter suppressing high-frequency noise voltages (WHP) and a Picture Control. The central controller sends data corresponding to the required picture quality to the shift register [7370], switching the outputs (pins 4, 5, 13 and 14) accordingly. The output signals of the shift register are summed via resistors [3542, 3543, 3544, 3545] and added to the 2.5V, between resistors [3552] and [3523]. The thus generated control signal PIC_CTL is passed to pin 3 of IC [7320], where it controls the lifting or lowering of high frequencies in the PICTURE CONTROL. In the follow on Y/C mixing stage the luminance and chrominance signals are added to one another. The FBAS signal is clamped, passed to a video amplifier and then output at pin 11 of IC [7320].

SQPB (Quasi SVHS):

Transistors [7195] and [7200] determine whether the VHS or SQPB signal path is chosen. If the control signal SQ-PB is low at transistor [7200], the VHS signal path becomes active and if the SQ-PB is high the SQPB signal path is selected.
For SQPB the FM signal is filtered as for VHS with a "peaking circuit" (inductivity provided by [5150], capacitors [2150, 2151]).
The circuit varies the normal VHS resonance frequency. The the signal passes through unattenuated at 7,5 MHz (5 MHz for VHS) the rejection frequency being 13 MHz (9 MHZ for VHS). After correction for group delay (transistor [7203], resistors [3403, 3404, 3405], capacitors [2203], inductivity [5203]), emitter follower [7210], transistor [7215] with resistors [3415, 3413, 3417], with condensator [2215] and with inductivity [5215] the signal passes through the same path as for VHS playback.

4.2 Chrominance unit

4.2.1 Recording (PAL and MESECAM)

The FBAS signal from the IN/OUT switching unit enters IC [Y7320] at pin 7 where it passes through a servo amplifier (AGC) and a low pass filter, allowing only the colour carrier (4.43 MHz) to pass through. The received chroma signal passes to the main converter after passing through a servo amplifier (ACC) mixing the chroma signal with 5.06 MHz which generates the 627 kHZ and 9.49 MHz frequencies. The 9.49 MHz is suppressed by the low pass filter and the 627 kHZ signal (chroma) is passed to the colour killer. The chroma signal is then output from IC [Y7320] at pin 38 and passed to potentiometer CAP [Y3387] to adjust the recording current. The chroma signal (CH-tape) is then passed to the head amplifier switching unit (HC).

4.2.2 Playback

To suppress the luminance signal, the non-regulated FM signal of the tape is filtered by the 1.6 MHz suction circuit (capacitor [Y2422], inductivity [Y5422]) improving the cross-talk from luminance to the chroma signal. The chroma signal is matched with the Entry (pin 38) of IC [Y7320] through transistor [Y7225]. At this stage the signal is regulated after passing through a low pass filter it is then amplified (with ACC) and then passed to the main converter. The main converter mixes the 627 KHZ signal with the subcarrier frequency 5.06 MHz thus regaining the 4.43 MHz chroma signal. The 5.687 MHz generated at the same time, is filtered out by the 4.43 MHz band pass. The chroma signal is then output at pin 19 of IC [Y7320] and the inverted signal at pin 17. Both signals are required for the comb filter in IC [Y7340]. The chroma signal is passed to pin 2 and the inverted chroma to pin 4 of IC [Y7340]. The comb filter in IC [Y7340] delays the respective signal at PAL by two lines in a circuit branch and by one line for NTSC and then to add it to the undelayed signal. The switch in the delay branch is controlled by the NTSC-H signal at pin 22. It switches between PAL and NTSC delays. The scanning frequency (3 + 4.43 MHZ = 13.29 MHz) is generated internally (IC Y7340]) from the chroma frequency. The chroma signal cross-talk compensated by the comb filter is passed from pin 23 of IC[Y7340] to pin 21 of IC [Y7320], where it is released from the 13.29 MHz signal by a low pass filter. The signal is then amplified and passed to a colour killer. The follow-on NAP circuit is only important for NTSC and does not influence PAL signals. From a band pass filter the signal leaves IC [Y7320] at pin 25. PAL and NTSC signals arrive unchanged at pin 23 of IC [Y7320]. There the chroma signal is passed to the Y/C mixing stage, and the chroma and luminance signals are added. The received FBAS signal is then clamped, amplified with the VIDEO AMP and then output at pin 11 of the IC [Y7320]. The FBAS-OUT passes via transistor [Y7335] to the IN/OUT circuit from where it is passed to the modulator and to the SCART sockets.
For MESECAM playback the comb filter is ineffective. The remaining signal path is the same as the PAL signal path.

4.3. Carrier processing

4.3.1 Recording (PAL)

For carrier processing a voltage controlled crystal oscillator (VXO) in the IC is used [Y7320], whose frequency is determined by the crystal [Y1060] connected to pins 27 and 28. The REC-APC detector compares the phase of the incoming transmitter burst with the VXO phase and adjusts the VXO accordingly. The control voltage is then output at pin 29 of IC [Y7320]. Additionally an oscillator (321FH VCO) integrated in IC [Y7320] is used, which is regulated by the synchronising frequency. The VCO oscillates with a 321 x line frequency fH, corresponding to a frequency of 5.015625 MHz which is divided by 8. The thus generated 627 kHZ frequency is applied to the sub converter, where it is mixed with the oscillating frequency of the VXO (4.43361 MHz). This forms the sub carrier 5.06 MHz passing through an internal 5.06 MHz band pass and then to the main converter. At this stage the 4.43 MHz signal is mixed with the 5.06 MHz sub carrier, creating the 627 kHz signal.

4.3.2 Playback (NTSC, PAL)

During playback the XO oscillator is running freely on a crystal frequency of 4.43361 MHz and is used as a reference for the VCO oscillator. The VCO is synchronised after re-conversion of the chroma signal from 627 kHz (PAL) or 629 kHz (NTSC) to 4.43 MHz by the burst of the played back colour signal. The PB-APC stage generates the control voltage for the VCO, regulating at the same time the phase of the crystal oscillator with the phase of the re-converted 4.43 MHz burst. The control voltage is smoothed by a filter section [Y3455, Y2253, Y2255]. The frequency of the VCO (5.015625 MHz) is divided by 8 and passed to the sub-converter mixing it with the oscillating frequency of the XO (4.433619 MHz). This also creates the sub carrier 5.06 MHz which is then passesed via the internal band filter to the main converter generating a 4.43 MHz signal from the 627 kHz signal with the sub carrier frequency.

5. SECAM L, Chroma Signal Processing

5.1 Recording

The FBAS signal from the I/O circuit part is applied to transistor [7570] and passes through a 2.8 MHz trap circuit [5550, 2551], increasing the selection effect of the next cloche [1080, 2555]. The signal is then passed through an emitter follower [7552], which passes the selected chroma signal to IC [7575-29] via the cloche. The signal then passes through a 15 dB amplifier and is passed to a limiting amplifier with a subsequent frequency divider via pins 25 and 24. The 1.1 MHz recording signal, generated by a 1:4 division of the chroma signal, is passed to pin 21 of IC [7575]. From here, it passes through an external band pass filter [2561,.., 2567], lowering the harmonics created by the frequency division, and returns to IC [7575] at pin 19. The signal then passes through a 10 dB amplifier and is connected to pin 15. Between pins 15 and 14, the 1.1 MHz signal is passed via the anti-cloche [1082, 2575]. In IC [7575], the signal is limited and then passed via pin 17 to an additional 3.3 MHz trap [5586, 2586] and then to the adjustment for the chroma recording

current [3581] (SCWC) to a further emitter follower [7583], from where it is passed on to the video head amplification circuit (HC).
The R/P change-over of IC [7575] is carried out at pin 23 by the PB switching status.

5.2 Playback

During playback, the non-stabilised FM tape signal (with 1.1 Colour Under) from band (FM-UNC) that has been supplied by the circuit (HC) is applied to [2556] and is then passed to IC [7575-(23)], where it is amplified by 6 dB. From pin 21, the FM signal (with 1.1 Colour Under) then passes through a band pass filter [2561,..., 2567], where it is separated from the Y-FM signal. The 1.1 MHz signalo pin 10 of IC [7598] is High. This status signal is passed to the deck controller IC [Y7085] in circuit "DE". The IC also receives the AUTOSEC (VHS) or AUTOSEC (SVHS) switching status.
The data is passed to CC controller [7035-(14), -(20), - (32)] via serial interface [Y7085/-(62), -(63), -(64)]. The data is then linked depending on the operating condition and the respective shift registers are triggered.
In case of VHS, SEC-E is output via the shift register (SR5) [7380 - (12)] and SEC-W is output via thl is then passed via IC [7575-(10)] to the band pass [2581,..., 2576], removing interfering doubling products from the utility signal. In a second doubling stage, which the 2.2 MHz signal enters via IC [7575-(8)], the 4.4 MHz signal is formed. It is then amplified by 10 dB and passes via pin 31, the anti-cloche circuit [1085, 2585], to pin 32. From IC [7575-(1)], the 4.4 MHz signal is passed to the band pass [5590,..., 5594], also freeing the utility signal from interfering harmonics. The SECAM chroma signal gained thus passes through the amplifier stage [7588] and the emitter follower [7593] and is then passed to [Y7240], circuit part "VS". The signal is then added to the BAS signal or is passed to the "SF" circuit in S-VHS sets.

5.3 SECAM detection

IC [Y7598] receives the 4.4 MHz chroma signal from the "VS" or "SF" circuit via pin 1.
IC [Y7598] detects whether the signal is a SECAM signal during recording or a MESECAM signal during playback. For MESECAM signals, the switching voltage (AUTO-ME) passed to pin 10 of IC [7598] is High. This status signal is passed to the deck controller IC [Y7085] in circuit "DE". The IC also receives the AUTOSEC (VHS) or AUTOSEC (SVHS) switching status.
The data is passed to CC controller [7035-(14), -(20), - (32)] via serial interface [Y7085/-(62), -(63), -(64)]. The data is then linked depending on the operating condition and the respective shift registers are triggered.
In case of VHS, SEC-E is output via the shift register (SR5) [7380 - (12)] and SEC-W is output via the same shift register [7380-(6)]. In case of S-VHS, the change-over output of the signal electronic for the SEC-E is carried out via shift register SR9S [7410-(12)], and for SEC-W via shift register SR5 [7380-(6)].

6. Deck Electronics (DE)

The deck electronics can be subdivided into various functional groups:

1. Reset generation
2. Threading motor control
3. Drive interface (deck)
4. Tape start/end recognition
5. Head servo control/commutation
6. Tape servo control
7. Tracking/autotracking

6.1 Reset generation

After connection to the mains IC [7080] and capacitor [2081] generate a reset pulse at pin 19, re setting the central controller on the chassis (family board) IC [7335]. During the initialisation phase of the central controller, shift register [7019] is maintained in the "Disable condition". IC [7240] will then generate a Reset pulse at pins 11 and pin 12 . This pulse will reset the Deck [7085] the operating unit, and the camera controller.

6.2 Threading motor control

The drive also contains three switches: INIT (Initialisation switch for the threading tacho counter), REC (erase protection), and S-VHS. The conditions of these switches are coupled via [3203], [3205] and [3201] and then passed to the deck via pin 52. The lift and the threading mechanics are controlled via the threading motor by counting the threading tacho pulses together with the INIT switch and the TAPE START/TAPE END recognition. The threading tacho values are securely linked with the drive positions and passed to the deck controller, [7085] via IC 7080. The rotational direction of the threading motor is determined by pin 35 of the Deck controller. The revolutions are identified at pin 10 of the deck controller, This is a pulse wide modulated signal which is integrated by [3250] and [2093] .The power operation driver IC [7090] serves as power operation amplifier.
The lift is mechanically connected to one impeller turning in a fork light barrier. The tape must be inserted until 3 threading tacho pulses are generated, after which the tape controller activates the threading motor and takes over the loading of the tape. During ejection of the tape and shortly before reaching the end position of the lift, the tape start and tape end sensors are mechanically released at the same time. After a short while the deck switches off the threading motor.

6.3 Drive interface (deck)

The interface module [7080] takes over the following tasks:

- Processing of threading tacho pulses
- Processing of winding tacho pulses
- Processing of Capstan tacho pulses
- CTL, Write/Read

Processing the threading tacho pulses

The lift is mechanically connected to the threading tacho generator. Tapes must be pushed into the lift until 3 threading tacho pulses have been generated. These pulses are passed to the Deck interface module [7080/6]. Via one of the 4 comparators of this IC. The signal is processed and then passed to the Deck [7085/29]. By counting the threading tacho pulses, the INIT switch and the tape start and tape end recognition, the deck controls the threading motor.

Processing of winding tacho pulses

The optocouplers on the left and right winding disks (WT1/WT2) generate 8 pulses per rotation. These are formed to rectangular pulses in the drive interface module [7080] and via a comparator and passed from pins 8 and 9 to the deck [7085]. The controller calculates the actual tape position and tape type from the ratio of the revolutions.

Processing the Capstan tacho pulses

The Magneto Recitive element produces pulses with a frequency of 1514 Hz during playback mode and these pulses provide the revolution control for the Capstan motor. The pulses are passed via connector contact [1502/15] to a comparator on the Deck interface module [7080/9]. Via [7080/12] these actual tacho values are passed to the deck controller [7085/13], which in turn generates a control voltage for the Capstan motor driver IC via a pulse wide modulated square wave voltage from [7085-25] , it is integrated with [3214] and [2066].

CTL - Write/Read

During recording, coded 25 Hz CTL pulses are recorded on the tape via the synchronising head, required for tracking during playback, recognising the 16:9 image page format and the index operation. These 25 Hz pulses pass during the recording from IC [7085/11, /14, /16] to the drive interface module [7080/18] and via [7080/2] and connector contacts [1502/6, /7] to the synchronising head.
During playback, the recorded CTL pulses are read off the synchronising head, converted into rectangular pulses in 7080 and passed via [7080/18] to the Deck [7085/11, /14, /16] for evaluation. From the timing of the CTL slopes the controller is also able to recognise the speed e.g (SP, LP PAL, or SP, EP NTSC) of a recording. The respective playback speed is selected automatically.

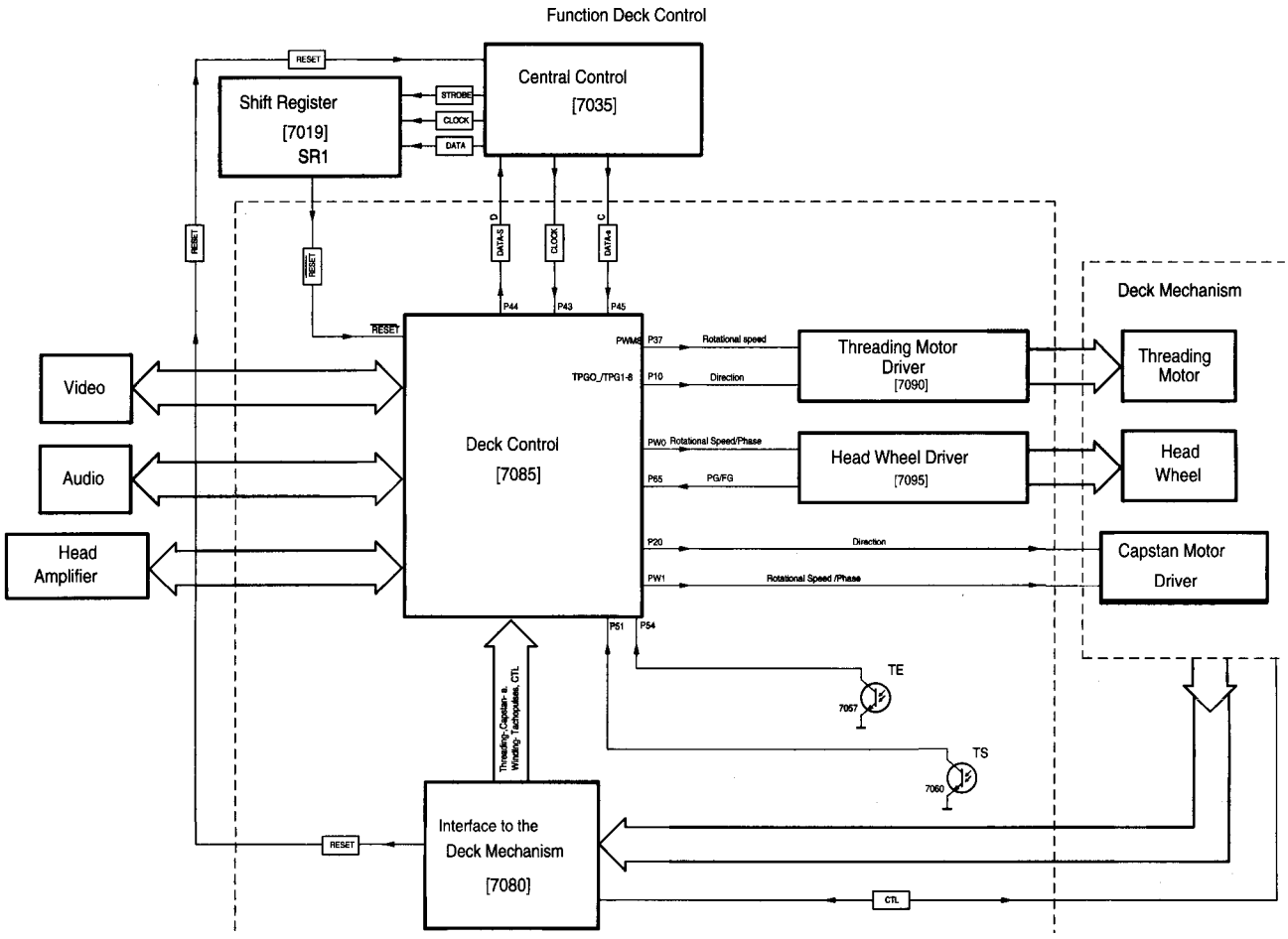

6.4. Tape start/tape end recognition

To recognise the tape start and end the Video tape contains a piece of clear foil on both tape ends. A transmitter diode placed into the tape centre is clocked by transistor [7073].

The photo transistors are fitted on the left and right sides of the deck, tape start = TAS) tape end (TAE), Both supply a pulse, which goes from 5V towards 0V , if the clear foil is located between transmitter and phototransistor. Both phototransistors are connected to the Deck via pins 51 and 54.

6.5 Head servo control/commutation

The head servo control supplies the correct revolution and phase signals required by the head disc and is carried out within the deck controller [7085].

For commutation, the head motor driver IC [7095] uses the EMF (electro magnetic force) of the currentless motor winding (transformer principle) from which the rotation is derived at the same time. The phase of the head disk is derived from a position coil. Revolution and phase are multiplexed to one signal (IC[7095/6]). At the same time the falling slope of the signal is the revolution (FG) (450 Hz); the position (PG) pulses having a positive slope with 25 Hz. At pin 24 of the deck controller a PWM output with 12 bit resolution is present, the head disk control voltage containing revolution and phase information, is issued from this pin. This pulse wide modulated signal is passed to the head wheel motor driver [7095/14] and integrated with capacitor 2116.

6.6 Tape servo control

The Capstan motor is a three-phase motor with a Hall generator. These generate signals which are passed to the driver IC on the Capstan motor (on the deck) via pins 1..6. Depending on these signals, the commutation of the individual phases of the Capstan motor is carried out by the driver IC. The FC Hall element of the Capstan motor issues pulses with a frequency of 1514 Hz at nominal revolutions for the revolution control. These are pre amplified on the sensor board and passed to a comparator via connector contact [1502/4] and then to pin 9 of 7080. The rectangular shaped tacho pulses are then compared in IC [7085] with a set value. Via pin 25 of the deck controller [7085] a pulse wide modulated rectangular voltage is present. This is integrated by [3214] and [2066] and passed to the Capstan IC via the socket contact [1502/6].
The change of rotation direction is carried out by pin 34 of the deck controller [7085].
To avoid heating of the deck from the dissipation of the Capstan motor driver at slow speeds the supply voltage for the motor is switched. For tape speeds of < double, 8V, and for speeds > double a 17V supply voltage is applied. In the latter case (17V) pin 3 of the Deck [7085] is set to High (WIND), switching on transistor [7205].

6.7 Tracking/autotracking

During recording, 25 Hz CTL pulses are written to the tape via the synchronising head which are amplified in IC [7080] and are then passed to the Deck. These pulses are rectangular in shape. The pulses are used for tracking, recognition of the 16:9 page format and the index search.
After inserting a tape, the voltage TRIV derived from the FM audio packets envelope is passed to the deck via pin 50 for optimum tracking. Starting from the centre position the tracking value is increased or decreased until the envelope voltage decreases compared to the highest voltage value. The centre value between the two corner values is set as optimum value. After the measurement, the autotracking function is switched off and the determined phase position is regulated via the CTL pulses.

During AUDIO ONLY - playback the audio envelope FMHT is used for the tracking function.

The autotracking function is only restarted if one of the following conditions is fulfilled:
- 17 missing CTL pulses
- Change between LP and SP
- Change between PAL/SECAM and NTSC standards
- Change between NTSC-SP and NTSC-EP.

this detects whether a carrier recognised by the AFC is also modulated with a video signal.

EP=EXTENDED PLAY
SP=SHORT PLAY

7. Central Control (CC)

Operation overview

The central controller IC [7035] controls peripheral functional groups via various bus systems. The communication with the deck controller controlling all functions of the deck takes place via DATA-S1 and CLK-S, and the communication with the display controller takes place via the I²C bus (connector contacts [1510/12 and /14]) and the bus-interface [1510/18]. The sequence control can be divided into the following functional groups:

1. Central controller with external memory and parallel RAM
2. Generation of operational and switching voltage
3. Various bus systems (OSD, FC, shift registers, SAT-controlling,..)
4. Reset generation for the deck electronics, operating unit (DC) and Edit Controller
5. AGC and AFC, and audio adjustment.
6. Shift register [7019]
7. EEPROM
8. RS 232 Interface

7.1 Central controller with external memory and parallel RAM

The central controller IC [7035] carries out the main control of the VCR. As the multitude of tasks can not be managed by the maximum possible internal program memory 6k x 8 ROM, an external program Memory is required. An EPROM (depending on type 128kB...512kB), IC [7030] and a LATCH module, IC [7027], are used, the latch controlling the access to the EPROM.
As the linear address area of the central controller allows only 64kB addressing, the access to an up to 1024kB program memory is enabled by bank switching IC [7035/10, /11, and /12]. To allow access to the EPROM, IC [7033/50] (EA) is earthed. Port 0 of the central controller will then have the Low Order Address and port 2 the High Order Address. After switching the LATCH module at pin 51 (ALE), data can be read in via port 0. As the internal RAM of the central controller with 256 Byte is insufficient for C programming, an external static 8kx8 RAM, IC [7032] is used as data memory. Via WR (pin 35) and RD (pin 36) the access to the RAM is controlled (Read/Write), the EPROM [7030] being switched off at the same time via the OE.

7.2 Generation of operational and switching voltages

Via pin 5 of the shift register [7019] transistors [7015, 7013 and 7018] can be switched in sequence, generating a $12V_F$ switching voltage from a 12V continuous voltage.
Via pin 4 of IC [7019] transistors [7017 and 7016] are switched to generate the 5SW1, 5SW2- switching voltage which is derived from the 5.2V supply voltage.

7.3 Various bus systems

a) "Easy Link"

A bi-directional single-conductor bus provides the communication between TV, video recorder and peripheral devices, running via contact 10 of the Euro-AV socket 1. The following features are available:

"One Touch Play":	VCR switches on TV
"One Touch VPT":	VCR switches TV on/off is indicated on TV
"Download":	TV transfers station settings to VCR
"What you See is what You Record":	VCR records TV image
"Pip +/-":	TV switches VCR tuner and uses VCR signal as Pip source

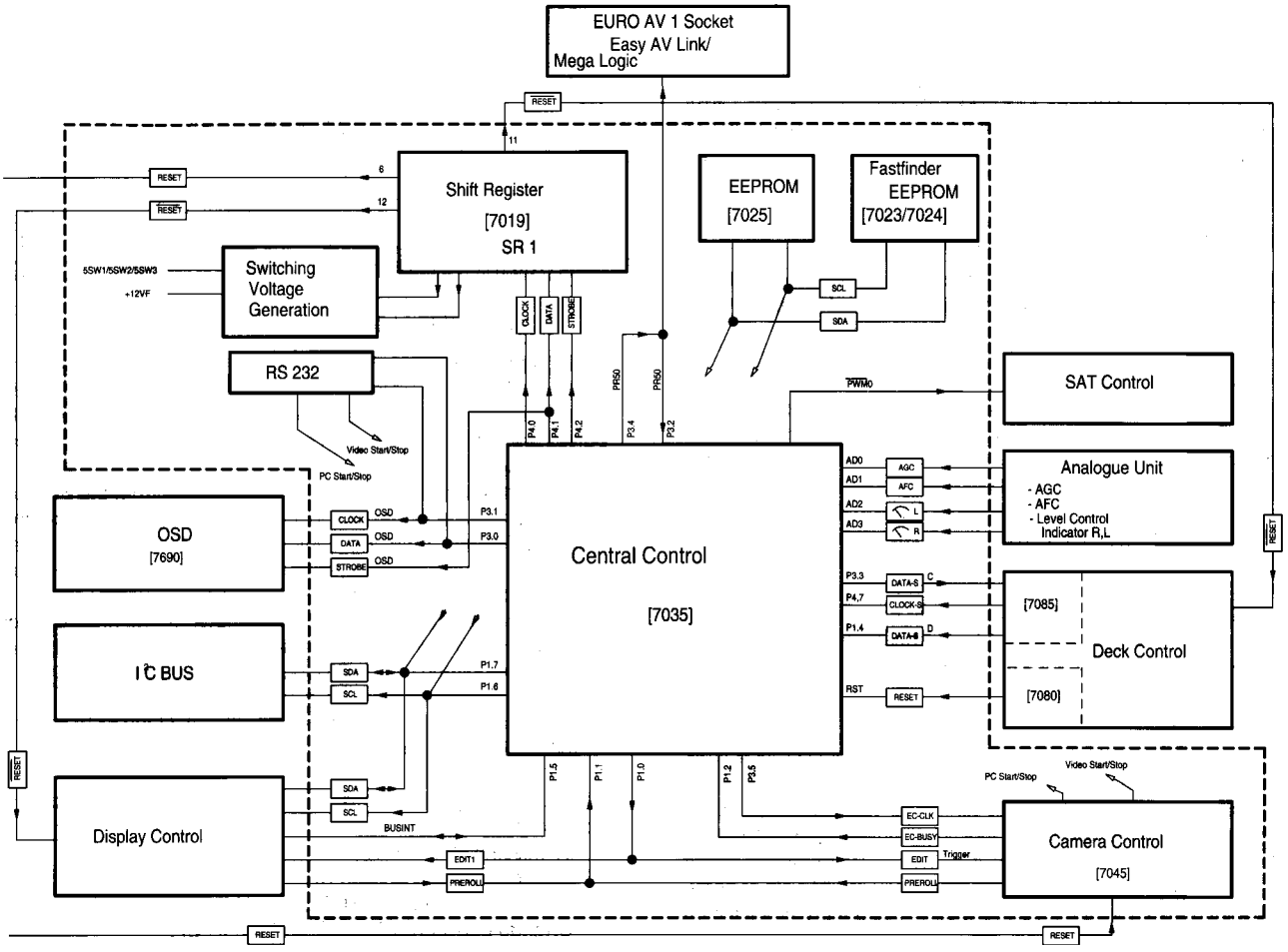

b) Serial bus extension port

By using the DATA (port 4.1) and CLOCK (port 4.0) lines, data is loaded into the present shift registers, the serial inputs and parallel outputs are switched to the shift register outputs by the transfer pulses supplied by the STROBE line.

c) Serial interface for camera µP (internal!)

The following four lines are required for the data transfer with the camera controller:

Edit 1, [7035-16]:	Data from Central Controller (CC) to Edit Control (EC)
Edit 2, [7035-17]:	Data from EC to CC
EC busy [7035-18]:	Reception acknowledgement EC to CC
EC-CLK, [7035-34]:	Clock from CC to EC

Together with the internal camera controller, edit control can be carried out with DC - Synchro Edit (Panasonic, JVC) and Lanc-Edit (Sony). In devices without camera controllers, lines Edit 1 and Edit 2 are directly passed to the central controller to facilitate Synchro Edit.

d) Serial interface to deck µP

The DATAD1[7035/14] and CLKD1 [7035-32] lines connect the Deck with the central controller. The serial interface operates in shift-register mode. The central controller is the master, consequently also generating the Clock signal at a transmission rate of 27 Byte per 1.8 msec. A subsequent break in transmission lasting 6 x 1.8 msec serves as synchronisation for the Deck. A complete transmission consequently takes 33 x 1.8 msec = 59.4 msec.

e) Serial interface to OSD

The OSD unit is connected to the central controller via 3 lines:

SCLK	{7035-30}	Serial Clock
SIN	{7035-29}	Serial Data
CS	{7035-20}	Chip Select

The transmission on this 3-conductor bus starts with a change of CS from High to Low. The data transfer takes place with the rising slope of the SCLK. The transmission of the Display RAM writing command can be followed up to CS = High by an infinite number of data characters.

7.4 Reset generation for Deck electronics, operating unit and Edit control

After connection to the mains IC 7080 and capacitor [2081] generate a reset pulse at pin 19. This resets the central controller [7035]. The shift register outputs [7019] are maintained in a disable condition (Outputs Tristate). By using this reset pulse transistor 7022,resistor 3073,Capacitor [2018] until the central controller has ended its initialising phase. IC [7240] then generates a reset pulse at pins 11 and pin 12, resetting the deck controller [7085] and the operating unit. The Edit Controller is reset via pin 6.

7.5 AGC, AFC and audio adjustment

The AGC, AFC analog parts and the audio adjustment are connected to the central controller [7305/1... /4] via 4 analog inputs AD0..AD3.

AGC: The signal coming from the IF IC [7005] is passed via the AD0 input to the central controller [7035/4] where it is used for evaluation of the received field strength (station sorting to field strength).

AFC: The signal coming from the IF IC [7005] is applied at the analog input AD1 of the central controller [7305/3] and serves for adjustment of the tuner to the exact reception frequency. When correctly tuned this input will be (AD1) 2.5V.

Audio control: At analog inputs AD2 and AD3 of the central controller [7305/1, /2] the FM envelopes of the right or left audio channel are applied for evaluation. These supply data for the autoircuit part containing [7690], serves to superimpose predefined characters (fixed-programmed character ROM containing 256 characters) onto a self-generated blue background (menus, test pattern, etc.) or onto the EE or playback picture (superimposed). The unit is arranged between the video chroma IC output (VS circuit diagram) and the matrix switch (circuit diagram I/O).
The voltage is supplied via 5SW2 for the digital part and via the filtered +5VAN (see DE circuit diagram) the circuit is de-energized in ister.
At the same time this module can be used to control the switching voltage generation and the generation of reset pulses for deck electronics, operating unit and Edit controller [7019].

7.7 EEPROMs

Timer data, titles, channels and station abbreviations, show view data and child protection data, etc. are stored in IC [7025] (216kB) via the I²C bus. Data about Fast Finder is stored in IC [7023], IC [7024]
via I²C-Bus. The memory for Fast Finder can be extended with ICs [7020] and [7021].

7.8 RS232 - Interface

A PC or µC can be connected to the VCR via this interface (socket RS 232- connected to [Y1538]). Via this interface commands as Play, Still, Stop, Record,... are transmitted from the PC to the VCR. The VCR can also deliver Time Code - markings via the interface. The serial data transmission between the internal main controller IC [7035] and the PC goes via IC [7046]. The levels of this interface range from +15V ... - 15V.

8. On Screen Display (OS) - Description

The OSD circuit part containing [7690], serves to superimpose predefined characters (fixed-programmed character ROM containing 256 characters) onto a self-generated blue background (menus, test pattern, etc.) or onto the EE or playback picture (superimposed). The unit is arranged between the video chroma IC output (VS circuit diagram) and the matrix switch (circuit diagram I/O).
The voltage is supplied via 5SW2 for the digital part and via the filtered +5VAN (see DE circuit diagram) the circuit is de-energized in the Low Power Stand-By mode.
The crystal oscillator [7690/2, -/3] is balanced via [2695] to the four-fold PAL color sub-carrier frequencyand this generates a colored background including the sync signal (w/o line interlace).
The levels for the self-generated background and the white characters to be displayed with a black edge are internally set and relate to a FBAS signal amplitude of 2VSS.
[7690/15] is the FBAS input of the OSD component. At this point, the picture to be recorded or to be played back always has an amplitude of 2VSS. In the superimpose operation, rapid analog switches feed this picture or characters corresponding to the respective brightness values to output [7690/13]. Synchronization is carried out externally, vertically via a picture synchronizing pulse to 7690-(20) and horizontally by the line sync to [7690/17]. In order to receive pulses in the same regular pattern even during interference or noisy picture, the horizontal PLL supplies line pulses of exact frequency and phase to [7082/2]. The low pass filtered FBAS signal of the VS circuit part serves as reference for the [7082/6].
The picture pulse is generated on DE by filtering the mixed sync signal separated from the IC [7082] and pulse shaping with [7091] and [7097]. The artificial V pulse generated by the drive computer (DE) during special playback functions, such as still frame, slow motion and picture search is fed via [7098] to the base of [7099].
The FBAS signal is reduced down to 1VSS by [7664, 3660] and [3662] and is then passed by [7650] as a low-impeadence signal to the matrix switch.
The display RAM [7690] facilitates the display of 12 lines with 24 characters each. The main CC writes to this memory via the three-wire bus [7690/9, -/10, -/11] using character codes, with separate registers determining the display position and the background. Each character is made up of a 12x18 dot matrix, whose vertical expansion is limited by the line-scanning pattern. The character width is determined by the LC oscillator [7690/6, -/7]. This oscillator operates at a frequency of 6.55MHz ± 2% and is synchronized by the trailing edge of line pulses present at [7690/17] or internally generated in case of blue background. Consequently, the character

read-out cycle and the background are firmly assigned. Counters clocked with the line frequency and the LC oscillator take over the addressing of the display RAM and the character codes are converted into image points by the character ROM.

Additional SECAM circuit:

Whilst no chroma signal exists for achromatic picture excerpts in PAL and NTSC systems, the unmodulated color subcarriers are transmitted in SECAM systems. An interruption of a subcarrier by the insertion of a character creates red and blue color streaks in the superposition.
Consequently, the colour information for the EE or the playback modes are formed by switches [7670] and [7674] and the band pass filter [2669] and [5669] into a low impeadence signals which is present at [7664].
For blue menu boards or other television standards, the circuit is blocked via a low level at [7690/19].

9. Input/Output (IO)

9.1. Video

9.1.1 General

Due to its numerous functions, the device requires an In/Out circuit part, selecting and distributing arriving or emitted signals depending on the source and the operating condition. The device mainly consists of a matrix switch IC [7200] for the video signals, two Euro-AV sockets (Scart1, Scart2), a "fading in switch" for text [Y7840] and a comparator [7875] for the "FOLLOW TV" function. It also contains various transistors [Y7700, Y7695,...] switching different signals depending on the selected operation.

9.1.2 Recording, loop-through and playback

Signals are selected and distributed in the matrix switches of IC [7200], where the input signals of the reference sources EURO-AV1[Y1916], EURO-AV2 [1917], CV, HF, EE/PB and the S-socket (Y)-IN are applied. These are clamped, selected according to the operating mode and are passed to the image processing circuits or to the output sockets. Applied chrominance input signals (Scart1/ Scart2 S-IN) are selected with the switch IC [7110]. If necessary, transistors [7059, 7066, 7070 and 7072] are used to switch input terminating resistors for the RGB or the chrominance signals.
The chrominance output signal is amplified in the chrominance amplifier [7210, 7208] and the respective circuit and is then passed to the chrominance output drivers.
Y and C signals are also added in matrix switch [7200], from where they are passed on as FBAS signals.
Transistors [7006, 7014, 7018] are used to supply the RGB or chroma loop-through signal between EURO-AV1 and EURO-AV2.

9.1.3 "Activation circuit"

The circuit around transistors [7130 and 7134] (at the connector contact 20 of EURO-AV1 or contact 8 of the AV2 socket!) is also active in the "0-watt operation". If a signal is applied to the socket contact 20 of the EURO-AV1 socket in this operating condition, e.g. if the TV is switched on or a switching voltage is applied at socket contact 8 of the AV2 socket, the circuit reports this to the control electronics, which in turn causes the set to switch to Stand By-Mode.

9.1.4 Decoder operation

The decoder (e.g. Pay-TV) is connected to the SCART2 socket and the TV to the SCART1 socket. If the devices are connected in this manner, the decoder can be used without rearranging TV or video recorder connections.
When using the video recorder, the encoded video and audio signals are passed to the decoder via SCART2. The decoded signals are then returned to the video recorder via SCART2. This signal path must be enabled for each program when tuning into the programs.
For TV use, the encoded video and audio signals are passed from the TV via SCART1 to SCART2 and on to the decoder (e.g. Pay-TV). Here the signals are decoded and returned via SCART2 and SCART1 to the TV. IC [7770] is used for the connection/switching of these devices.

9.1.5 "FOLLOW TV" circuit

This circuit (arranged on the tuner/modulator unit in the circuit diagrams) places each individual program of the video recorder onto the same program position number as in the connected TV.
For this, the FBAS signal from the IF part of the video recorder is compared with the TV signal.
The recorder signal is passed to transistor [7832], where the signal is inverted and amplified. The adjusted FBAS signal from the TV is passed to amplifier stage [7834] via the EURO-AV1 socket and matrix switch [7200]. Both signals are then added and passed to the negative comparator input [7830-(2)]. In case of equal FBAS signals, the voltage at pin 2 of the comparator is higher than the stipulated input voltage at pin 3. The comparator output (pin 1) is low in this case. If the FBAS signals differ, the voltage at pin 2 of IC [7830] is lower than the voltage at pin 3. In this case, the comparator switches its output to High. The corresponding output level of the comparator is then applied to the central controller [7035/19]. If the central controller only receives a low level via a measuring cycle, the received programme is stored under the same programme number as in the TV.

9.2. Audio

9.2.1 General

Due to its numerous functions, this part of the VCR requires an In/ Out circuit section, this enables the selecting and distributing arriving or emitted signals depending on the source and operating condition. This section of the VCR mainly consists of a matrix switch which is in Audio IC [7200] and two Euro-AV sockets (Scart1, Scart2).

9.2.2 Recording, loop-through and playback

Audio signals are selected and distributed in the matrix switch in IC [7400], where the input signals, EURO-AV1[Y1916], EURO-AV2 [1917] and HF are applied. The signals are selected according to the operating mode and passed to the audio processing circuits or a direct "loop-through" of the audio signal to the Euro AV sockets is carried out. Audio IC [7200] is controlled by the I2C bus with the integrated matrix switch.

10. AUDIO (AU)

10.1 FM Audio

Due to the symmetrical design of the audio channels only the left channel (L) is described.

10.1.1 Operational overview

In the FM stereo switching circuit, the audio signals are selected from the different input sources during recording and then compressed. Then the two carrier frequencies (1.4 MHz - left and 1.8 MHz - right channel) are frequency modulated and recorded on to the tape by both rotating audio heads.
During playback, the information read from the tape from the rotating audio heads is passed to the FM tone circuit section. After demodulation the signals are expanded to the original dynamics (noise suppression) and then passed to the audio output sockets.

10.1.2 Recording (eg. via AV I or EI)

The input signals (LINE, Euro-AVI, Euro-AVII (decoder), CV (or E3) and RF) are present at the input selection switch (INPSEL) of IC [7400]. The selected LF signal (L) passes through an internal digital level adjuster and is passed via a summer to the standard audio linear circuit for longitudinal track recording and then via the low pass (LPF) to a compressor stage (factor 2) for noise reduction. From the compressor it passes from pin 64 and pin 63 of IC [7400] through an audio clipper, which serves as a snubber. After passing through a central controller stage and a RF low pass filter (RF LPF) the modulated 1.4 MHz FM signal is added to the 1.8 MHz FM signal of the right channel and passes via pin 56 and connector contacts [1637-(12)] and [1506-(4)] as "FM to tape"(FMTT) to the heads.
When recording both carrier frequencies on to the tape the RF amplitude of the 1.8 MHz carrier is approx 9,5 dB larger, as this carrier is erased more by the subsequent video head. This

guarantees, that both RF carriers have approximately the same amplitude during playback.
All selection switches and regulators in the IC [7400] are controlled by the central controller , IC [7035] via the I²C bus.

10.1.3 Playback

After the head amplifier the tape signal passes via [1637-(14)] to the FM audio circuit, it is then separated by the internal band pass filter (1.4 MHz left / 1.8 MHz right) and passed via the RF limiter (RF LIM) to the demodulators (PLL). The demodulated RF signal (L) passes through a sample-and-hold circuit, which suppresses LF signal interference caused by the head change during reading. The "sample-and-hold "pulse" required for this operation is generated within the IC [7400] by using the "HI sound" pulse (IC [7085] on the motherboard). The LF signal (L) then leaves the IC [7400] at pin 63, passes via pin 64 back into the IC and then via a low pass filter (for noise reduction) to the outputs via the output selection switches. The hi-fi audio signals are added and passed via IC [7400-(18)] to the modulator. From the envelope rectifier the rectified LF-signal passes via the connector contact [1637- (7)] to the main controller IC [7035]. IC [7035] controls the bargraph level display on the operating unit via the serial interface and the display controller IC [7035].

10.1.4 Hi-fi audio recognition

The 1.4 MHz part of the "FM from tape" (FMFT) signal passes in the IC [7400] from the RF limiter (RF LIM) via a level detector (LEV DET), pin 60 and connector contact [1637-(3)] to the central controller IC [7085]. This direct voltage is dependent on the FM signal amplitude and therefore represents the actual signal amplitude.
If the voltage is above 2.14V, the hi-fi audio recording will be played back. If it is below 1.9V, the central controller switches over to the standard track. This value is also used with an A/D converter for tracking adjustment.

10.2 Audio Linear

10.2.1 Operational overview

During the recording the audio signals destined for the longitudinal track recording pass from the input selection switch (INP SELECT) in IC 7400 to the standard track circuit within in the same IC and are then prepared for recording.
During playback the LF signal is taken from the REC/AW head, amplified and passed to the output selection switch [IC 7400].

10.2.2 Recording

From the input selection switch [7400] the selected LF signal passes via an automatic level controller (ALC), at pins 29,28 and then on to the recording equaliser (REC EQ). From the record equaliser via connector contact [1503/1] the signal is then applied to the recording head.
The LF signal leaves the IC [7400] at pin 33, and is added as writing current [3603] to the pre-magnetisation (BIAS current) [3645].

It is then passed via connector contact [1503-1] to the REC/PB head. The other end of the REC/PB head is connected to ground via the connector contact [1503-3] and IC [7400-34]. The pre-magnetisation current is adjustable with [3645] (BIAS).
In Longplay mode, the switch-over of the recording equalisation is carried out with the internal switch at IC [7010/30] under the control of the I²C bus. The S-VHS equalisation is switched through transistors [7640, 7635] controlled by shift register SR4 [7402-(5,11)].

10.2.3 Erasing oscillator

The main and linear audio erasing heads are triggered by two separate osccillators:
The main erasing head oscillator consists of transistors [Y7510] and [Y7515]. The oscillator is triggered by the switching levels WR-A2 (from shift register SR4, IC [7340-6]) and WR-A1. The Linear erasing head oscillator consists of transistor [7655] and oscillator circuit [1250/Y2648]. At this point the pre-magnetising voltage (BIAS) is also tapped.
The Linear erasing oscillator is triggered by the switching level WR-A1 from [IC 7085-(60)] and by transistors [7665] and [7660].
During post-synchronisation only the Linear erasing head is triggered.

10.2.4 Playback

During playback the REC/PB head is earthed via connector contact [1503/1] and transistors [7610] and [7615]. The REC/PB switch-over is controlled via the I2C bus. The LF signal read off the REC/PB head passes via [1503-3] to IC [7400/34]. In IC [7400] it passes through a linear amplifier, an integrated playback level adjuster (PSET) and an integrated playback equaliser (PB EQ). From here it leaves the IC [7400] at pin 29 and passes via capacitor [2627] and pin 28 back into the IC, where it passes through the MUTE circuit (NO MUTE), an output selection switch (OUT SEL) and then to the outputs.
For "LP playback" the integrated switch at pin 35 of IC [7400] effects a rectification change-over with the PB EQ.

10.2.5 Muting

The "Mute" signal, arriving from the I2C bus, mutes the audio outputs of the IC [7400] during servo lock up and all other operations except recording, playback and EE operation.

11. Videotext

The additional VT module contains mainly two functional blocks, [7140] for VPS-, PDC- and Videotext processing, and [7080] for converting the menu or Videotext boards output into either RGB or a standard a PAL-FBAS signal.
The voltage is supplied via the 5D1, with the circuit being de-energized in the Low Power Stand-By mode.

11.1. IVT (Integrated Video-Input-Processor and Teletext Decoder)

IC [7140] provides the following functions:

- Data separation

An adaptive data separation stage generates the VPS-, PDC- or Videotext data from the FBAS signal supplied via the [7140/9]. For this purpose, the video signal is passed to an A/D converter. The data separation and cycle processing, 6.9375MHz for PDC and Videotext, or 5MHz for VPS, is digital. The charging capacitor [7140/8] stores the black level. A reference current for the analog signal processing is generated via [7140/10].

- Cycle PLL

A free-running crystal oscillator [7140/1, -/2, -/3] supplies a frequency of 27MHz. This is passed to the A/D converter, and to a digital PLL, using it to generate the 6MHz, 1MHz and 15.625kHz base frequencies. The line frequency generated is thus passed for phase comparison, as is the sync signal derived from the FBAS signal. The characteristic of the downstream digital loop filter is influenced by a control register and the 6MHz oscillator is corrected accordingly.
In this way, all frequencies generated by the IVT are line coupled with the arriving FBAS signal. During free-running (i. dot matrix, stored in the character ROM of the IVT. The line-coupled 1MHz cycle advances the addressing of the page memory. The character representing the 8-bit code forms another part of the address on the character ROM, the other part is formed by a line counter. The ROM thus supplies a 12-bit data word after each 1µs according to the brightness information. This is loaded into a shift register and is read with a 12MHz pixel cycle derived from a 6MHz cycle. The respective RGB signals are available at the push-pull outputs [7140/16, -/17, -/18]. Their amplitude is determined by the reference voltage at [7140/19]. After amplification by [7045] and [7040], the blank signal of [7140/20] controls the FBAS signal converter [7100] on circuit component I/O (VHS) or [7040 and 7060] on circuit component CF (S-VHS).

11.2. RGB encoder and FBAS converter

The RGB signals are applied to [7080/2, -/3, -/4] and the mixed sync signals of [7140] are applied to [7080/10]. The 4.43MHz color subcarrier supplied by the Vihe page number The acquisition then compares all arriving data with the requested page and saves these in the page memory.

- Page memory

The unit contains an 8kx8 DRAM for saving up to 8 text pages. VPS and PDC data are also stored in the DRAM, from where they can be called up by the main computer CC.

- Character generator

There are 256 characters. An 8-bit data word is assigned to each character. 32 are control characters, the rest are graphical or alpha-numeric characters in the form of a 12x10 dot matrix, stored in the character ROM of the IVT. The line-coupled 1MHz cycle advances the addressing of the page memory. The character representing the 8-bit code forms another part of the address on the character ROM, the other part is formed by a line counter. The ROM thus supplies a 12-bit data word after each 1µs according to the brightness information. This is loaded into a shift register and is read with a 12MHz pixel cycle derived from a 6MHz cycle.
The respective RGB signals are available at the push-pull outputs [7140/16, -/17, -/18]. Their amplitude is determined by the reference voltage at [7140/19]. After amplification by [7045] and [7040], the blank signal of [7140/20] controls the FBAS signal converter [7100] on circuit component I/O (VHS) or [7040 and 7060] on circuit component CF (S-VHS).

11.2. RGB encoder and FBAS converter

The RGB signals are applied to [7080/2, -/3, -/4] and the mixed sync signals of [7140] are applied to [7080/10]. The 4.43MHz color subcarrier supplied by the Video-Chroma-IC (VS circuit diagram) is applied via [7080/6].
The IC [7080] uses these signals to generate a Y signal (brightness) at [7080/16] and a PAL-Chroma signal at [7080-(15)], which, in case of VHS, is added to the FBAS via [3148] and [3150] in the I/O circuit part and is passed to the inputs of a rapid converter [7100/1, -/10].
There, [7100/6, -/7, -/8, -/10) correspond to the EE or recording circuit and [7100/1. -/3, -/4, -/5] are also responsible for the playback signal.
For S-VHS, the brightness and chroma signals are passed separately to the converter [7040] and [7060] (circuit component CF), where the pins -(1), -(3), -(4), -(5) correspond to the EE or recording circuit and -(6), -(7), -(8), -(10) to the playback circuit.
The öblankö signal supplied by [7140/20] determines the keying in point of the text information. There are three conditions. For subtitles, the öBlankö corresponds to a square wave signal, for whole text pages the signal is high and, for pages on which no text is superimposed, the signal is low. At I/O there is an additional option to block the blank via shift register 3 [7000-(7)]. This pin is always low, except during subtitle and title generation recording.

11.3. Subtitle recording, title generator

To record subtitles without color defects, the 4.43 MHz subcarrier and the burst phase - important for PAL - must be synchronous to the transmitter picture. For this purpose, the colour subcarrier passes through a phase shifter with [7055, 3057] and [2058]. Apart from the subcarrier, the Chroma-PLL also generates a burst phase identification (VS circuit diagram for VHS [7230] or SF circuit diagram for S-VHS [7312]). This fH/2 signal of approx. 30mVSS is passed to the tuned amplifier [7005, 1001] and [2000] from which [7010] and [7015] form a square wave signal of approx. 5VSS and half the line frequency, which then synchronizes the chroma V component of the FBAS signal generated by [7080] via [7080-(7)]. In case of whole pages, this synchronization is blocked via [7017], in which case [7080-(7)] is approx. 0V.
The detection of "Subtitle" or "Whole page" is automatic via integration capacitor [2027], which only achieves a voltage of approx. 0.7 V for whole pages.

11.4. Colour replacing circuit - SECAM option

For S-VHS sets the colour replacement is carried out by the shift register 6 on circuit diagram CF).
Whilst in PAL and NTSC systems no chroma signal exists for achromatic picture extracts, the unmodulated colour subcarriers are transferred in SECAM. The interruption of a subcarrier by inserting a character results in red and blue color stripes at the point of superposition. For SECAM the color information of the transmission picture is therefore positioned on top of the subtitle superposition which then appears black/white and slightly transparent. The same effect is used for the Feature Edit Table.
For VHS sets, the colour information of the EE or the recording image is passed via switch [7073] and that of the playback image via switch [7074] to the band pass [2065, 5065] and [3065]. The converter is activated by the playback voltage +5VW. Transistors [7060] and [7070] amplify the chroma signal 2-fold. [7050] and [7052] form another converter, which either switches the PAL chroma of [7080-(15)] to the [7090] or the chroma of the background image via [7050] and a high level at the Open-Collector output. In PAL transmitters, [7140-(21)]. [7140-(21)] is on low for whole pages and subtitles.
The delay spool [5095] in the circuit part I/O is shortened via [7097] for SECAM playback and the shift register 4 [7402-(11)] (circuit diagram AU).

11.5. Superposition during playback

The Fast-Finder and Edit-Table features require superposition also during playback. For this, [7140] is externally synchronized via the connectors -(13) and -(14). For the horizontal deflection, the Teletext contains the CS mixed sync signal and, for the vertical selection, a picture pulse from the deck electronics (DE circuit diagram). At this stage, the picture pulse is generated by filtering the mixed sync signal separated from [7802] and amplified by [7083] and by pulse formation via [7092] and [7097]. The base of the [7099] receives the artificial pulse additionally generated by the DE computer during special playback functions, such as still picture, slow motion and picture search via [7098]. Via the shift register [7019-(7)], the CC computer selects the filtered picture pulse during EE mode, recording or playback and the artificial V pulse for special playback functions.
During playback, the voltage +5VW has a level of approx. 5V. [7110] then switches the operating resistor [3111] to the collector of [7115] which in turn inverts the picture pulse and passes it to IC [7140-(14)]. The same applies to the horizontal synchronization with [3012]. IC [7140-(18)] is, however, both an input and an output. When displaying an entire page during playback, the [7140-(13)] supplies the correct mixed sync signal, suppressing the externally applied line sync with [7018].
During recording or EE operation the +5VW is only approx. 0.5V. The external C sync is then also blocked and [7140-(14)] must be a constant +5V.

12. Comb filter (CF)

12.1 Functional overview

This circuit component divides the FBAS signal into a luminance and a chrominance component (for PAL signals), loops subtitles or whole videotext pages into the signal paths, makes a selection from different input signals and carries out a filtration and run-time correction for SECAM (only for multi-standard sets!) MESECAM signals.

12.2 Recording

The FBAS or BAS signal is provided by the IN/OUT module via connector contact [1526-(9)] and passes to IC [7010-17] via emitter follower [7306] and to the "SEC TO PAL" circuit component [FBAS-TR] (only for SECAM).
In the IC [7010], the chroma signal and the brightness signal are separated and passed on to different IC outputs. The chroma signal is provided at IC [7010-12] and the brightness signal at IC [7010-14] for further processing.
With a Y/C input, the chroma signal arriving via connector contact [1526-7] from the IN/OUT module is offered to IC [7010] at pin 10 and the luminance signal at pin 17. The control line at pin 3 of IC [7010] is used in this case to switch (Y/C-IN) to the bypass mode - and IC [7010] for SECAM or MESECAM - i.e. chrominance and luminance are not separated.

The switch IC [7030] switches between the FBAS signal, the colour signal of the comb filter or the colour signal from the SP circuit component. The control is provided by the status lines SR1 and SR2 (pin 2 or pin 4 [IC 7030]). The signal is then passed to the SF circuit component via a further switch IC [7040] and an emitter follower

[7042]. The signal is passed to the connector contact [1526-13] and on to the IN/OUT module via switch IC [7040] and the emitter follower [7545].

The chroma signal (CVT) for subtitles or whole pages, supplied by the text module via connector contact [1526-(16)], is inserted into the respective signal by switch IC [7040]. The control is provided by the status lines "UT-REC" and "GANZE_SEITE" (WHOLE PAGE), applied to ICs [7040/7060] via connector contacts [1526-(15), -(14)] from the IN/OUT module.

The brightness or FBAS signal passes as a "VIDEO_IN" signal from IC [7010-(14)], via IC [7070] (in European sets only!), and via IC [7060], and emitter follower [7062] to the SH circuit component. The YVT signal arriving from the text module via connector contact [1526-(18)] is inserted into the existing video signal with the switch IC [7060] controlled by the status lines "UT_REC" or "GANZE_SEITE" (WHOLE PAGE).
In multi-standard sets or in SEC TO PAL mode, the brightness signal can be connected for signal processing (SH) with IC [7070].

In SEC TO PAL mode (multi-standard sets), the FBAS signal is passed from the connector contact [1526 - (9)] via the emitter follower [7306] and connector contact [1524-(3)](SH) to the SP circuit component. Parallel to this, the signal passes to a 3 MHz low-pass filter [1002] and a trap circuit [1004, 2084]. In this stage, the signal is cleaned from the chroma parts and passed via the run-time correction elements [7092, 5094, 2094, 3094, 7102, 5106, 2106, 3106] and an emitter follower [7108] to switch IC [7070], enabling further signal processing via status lines SR7 and SR8, if necessary.

12.3 Playback

The VIDEO_OUT signal arriving from the SH circuit component passes via ICs [7050], [7060] to the emitter follower [7066] and via the connector contact [1526 - (11)] to the IN/OUT module.
The chroma signal EE/PB_CH arriving from the SF circuit component passes via the two ICs [7050, 7040] and the emitter follower [7545] to the connector contact [1526 - (13)] and to the IN/OUT module for further processing. The signal path through the IC [7050] is determined by both status lines SR4 and SR5.

13. S-VHS Luminance processing (SH)

13.1. Functional overview

During recording, the luminance unit (SH) serves to adjust the luminance or FBAS* signal from the CF circuit component (*only for Mesecam or Secam) as well as to convert the luminance signal to a frequency-modulated signal and to provide this signal to the head amplifier for further processing.
During playback, its main function is the processing of the FM signal provided by the VS circuit component which is reconverted into an amplitude-modulated signal, freed from drop-outs in IC [7520] and is then returned to the CF circuit component.

13.2. Recording

During recording, the Mesecam/Secam FBAS or luminance signal is passed to IC [7520-(48)] via capacitor [2591]. Here it passes through an AGC stage and is then available at pin -(4) for further processing. The adjusted signal is passed to the "comb filter" circuit component (CF) via IC [7520-(43)] and transistor [7588].

13.2.1 S-VHS recording

The luminance signal passes from pin 4 of IC [7520] via a frequency response correction circuit [7598, 7608, 7612, 7606, 7636, 7615, 1052] to the 5 MHz low-pass filter [1054] and via 2501 to pin 16 of IC [7520]. The signal leaves the IC at pin 6 and passes through a non-linear peaking circuit [7656, 7662, 7664, 7670, 7672, 7674, 1060, 7678, 7684, 7686, 7688] which is switched between recording and playback by IC [7810] and is then passed via [2713] to pin 14 of the SVHS sub emphasis IC [7700]. The luminance signal then leaves IC [7700] at pin 7 and is passed to pin 7 of IC [7520] via transistor [7702], the recording/playback switch IC [7810] and capacitor [2487]. In this IC, it is passed to the ME stage and to the FM modulator via the adjusting controller (WV-SVHS) [3513]. The controller (SV-SVHS)[3509] is used to set the SVHS black level. The FM signal leaves IC [7520] at pin 25 and then passes via a SVHS-FM filter [5760, 5758] to the FM output stage [7764, 7766], and via adjuster [3765] to connector contact (CF) [1530-(6)] and then to the head amplifier.

13.2.2 VHS recording

The luminance or FBAS signal for Mesecam or Secam passes from pin 4 of IC [7520] via the frequency response correction circuit (see S-VHS recording) to the 3 MHz low-pass filter [1056] and via the electrolytic capacitor [2500] to pin 14 of IC [7520]. In this IC, the signal then passes to pin -(6), through a non-linear peaking circuit [7656, 7662, 7664, 7670, 7672, 7674, 1060, 7678, 7684, 7686, 7688], which is switched between recording and playback by IC [7810], and then via [2488] to IC [7520-(8)]. It is then passed via a NLE stage (Non-Linear Emphasis) to a ME stage (Main Emphasis) [3502, 2504, 2505, 3500]. It leaves the IC [7520] via pin 19. From the adjuster (WV-VHS) [3507], the signal returns via pin 20 to the IC and to the FM modulator. The black synchronous level (SV-VHS) is determined with adjuster [3503].
The FM signal leaves IC [7520] at pin 25, is then passed to the FM output stage [7768, 7766] via a band-pass filter [5774, ...] and to the connector contact (CF) 1530-(6) via adjuster [3765] and then on to the head amplifier.

13.3. Playback

During playback, the tape FM signal (FMF.T.) is passed from the head amplifier via the motherboard, containing both FM filters for VHS and SVHS (see description VS circuit component for VHS sets), to the connector contact [1530-(1)] on the SVHS board.

13.3.1 S-VHS playback

The FM signal passes to IC [7520 -(29,26)], in which it runs through a limiter and marking stage, before being converted to a luminance signal in a FM demodulator. The de-emphasis is active at pin 36 [3560, 3562, 2560, 2562]. In IC [7520], the signal also passes through a 2.5 dB amplifier and via pin 4, a frequency response correction stage (see recording), to the 5 MHz low-pass filter [1054] and then to pin 16. The luminance playback amplitude is set with the adjusting controller [3545]. The signal path up to pin 7 of IC [7520] is the same as for S-VHS recording. During its further course, the luminance signal is passed to a PIC-CONTROL stage in the IC, controlled by a direct voltage at pin 40. From here, the luminance signal is passed to pin 43 via a further amplifier and then to the IN/OUT module via emitter follower [7588] and connector contact [1526-(11)].

13.3.2 VHS playback

The FM signal is passed to IC [7520 -(30)]. From this stage, the course of the signal corresponds with that of the VHS recording or S-VHS playback, with the exception that it passes through the 3 MHz low-pass filter [1056].

13.3.3 Drop-out - detection and insertion

The FM signal applied to IC [7520-(30)] is passed to a drop-out detection circuit in IC [7520]. In the case of a signal drop out, this circuit emits a pulse to the drop-out switch for the duration of the drop out. The luminance signal from pin 13 of IC [7520] is passed to the 1 H delay line [7725]. At pin 5, the latter receives the clock frequency 2 fsc. The luminance signal delayed by 1 line is applied to IC [7725-(3)], which then passes to IC [7520-(9)] via transistor [7722], a low pass filter and an emitter follower [7728]. In case of a drop out, the switch in the IC uses the drop-out (free) signal delayed by 1 line. The correct amplitude of the signal to be inserted is set with adjuster [3723].

14. Chrominance circuit component [SF] - Description

14.1 Functional Overview

During recording, the 4.43 MHz colour signal is converted to 627 kHz with the aid of a 5.06 MHz mixing frequency. The pilot burst is also recorded during the H-Sync period [S-VHS standard].
For playback, the signal is converted back from the 627 kHz colour signal to the original 4.43 MHz colour signal with the aid of a mixing frequency. The signal is amplified, added to the BAS signal, and enters the modulator and the FBAS outlet sockets. It also enters the SVHS sockets as a 4.43 MHz colour signal.

14.2 Recording

The signal path for recording is the same for PAL and MESECAM. The FBAS signal or C signal from the CF circuit component enters IC [7270] via pin 9. Inside the IC, the signal passes through a REC/PB switch, leaves the IC at pin 5 and arrives at the external 4.43 MHz band-pass [1025]. At this stage, the chroma and FBAS signals are separated. The chroma signal then enters another REC/PB switch via pin 17, an amplifier [ACC AMP], pin 6, and a capacitor [2266] and then the main mixer [MAIN BM] via pin 7. The 4.43 MHz chroma signal and the 5.06 MHz sub-carrier frequency are then mixed in the main mixer. The converted 627 kHz chrow pass filter [5176, 2180], the phase shift [all pass], the inverter stage [7190] and the switching stage [7192, 7196]. These two signal paths form what is known as a "comb filter" for cross-talk compensation.
The function of a comb filter is to delay the signal by 2 lines for PAL and by one line for NTSC in a switching branch, and to add it to the non-delayed signal. In this case, the playback signal is delayed between [7175-(1)] and [7175-(3)]. It then runs through low pass [5176/2180] and a phase shift the parallel oscillation circuit [1027, 2262]. Its amplitude is determined by adjuster [3295].

14.3 EE mode [Secam only!]

The signal sequence for the EE mode with FBAS input signal and YC output only differs from the recording signal path from pin 6 of IC [7270] onwards. From pin 6, the 4.43 MHz signal travels for further processing in the CF circuit component via the parallel oscillation circuit [5348, 2348] and the impedance converter and/or switch [7348].

14.4 Playback

The unregulated FM tape signal (FM-UNC) from the HC circuit component enters the SH circuit component via the CF circuit component. From here, it runs through the band-pass filter [2823...2826], filtering out the 627 kHz chroma signal. The subsequent transistor stages [7807 and 2708] amplify the signal. From this point, only the 627 kHz signal is passed to the chrominance circuit component (SF). The signal path then splits into a direct [3167] and a delayed signal path [2164]. The latter consists of a CCD delay line [7175], the low pass filter [5176, 2180], the phase shift [all pass], the inverter stage [7190] and the switching stage [7192, 7196]. These two signal paths form what is known as a "comb filter" for cross-talk compensation.
The function of a comb filter is to delay the signal by 2 lines for PAL and by one line for NTSC in a switching branch, and to add it to the non-delayed signal. In this case, the playback signal is delayed between [7175-(1)] and [7175-(3)]. It then runs through low pass [5176/2180] and a phase shift [all pass], in which the voltage of the delayed signal is set with [2184] and [3184] in the phase, thus initialising the inverter stage [7190]. This results in a signal that is phase shifted by 180° at the collector, which enables the signal to be subtracted from the direct signal in the event of a half-picture. For addition, the signal is taken directly from the base of the inverter. The signal, which is controlled by the HI chroma pulse (CROT), travels via switch transistors 7192/7196 to the adjuster [CF = comb filter] [3167], with a 0° phase, and, after switching over, with a 180° phase. At this stage, the delayed signal is added to the direct signal.
The CCD line [7175] is clocked at 1fsc for PAL, thus resulting in a 2-line delay. For NTSC, the CCD line is clocked with 2fsc, resulting in a delay of one line.

During the MESECAM operation, the delayed signal path is bypassed. The 627 kHz chroma signal thus arrives at the adjuster [CF] via [Y7026], where the two direct signals are added. The [Y7026] is controlled by the shift register with the control voltage +SOST.
The 627 kHz chroma signal arrives at IC [7270 -(15)] from the adjuster [CF] via emitter follower 7166. From here, it enters the main mixer [MAIN BM] via a REC/PB switch, a regulated amplifier [ACC AMP], and pins 6 and 7. The signal is then mixed with the 5.06 MHz sub-carrier frequency. The retrieved chroma signal [4.43 MHz] then passes to the external 4.43 MHz band-pass filter [1025] and pin 17 to IC [7270] via a REC/PB switch [SW2] and pin 5. In MESECAM, it then arrives directly at the PAL/SECAM switch. In PAL//NTSC, it leaves the IC [7270-(47)] after passing through a 4 dB amplifier and arrives at the PAL/SECAM switch via an external trap [1023/2256], IC [7270-(45)] and a comb filter driver [COMB]. It then runs through a playback amplifier with a colour killer and a pilot burst sensor. It leaves IC [7570] at pin 42 and enters the colour standard converter [7200-(14)] via emitter follower [7220]. For NTSC playback ON-PAL-TV, a quasi-PAL signal is generated from this. No standard conversion takes place in PAL and MESECAM playback. The control for this runs via pin 13. The signal then leaves [7200] at pin 11 and is passed via the emitter follower [switch] [7234] to the CF circuit component for further processing.

14.5 Carrier preparation

- Recording [PAL]

A voltage-controlled crystal oscillator [VCXO] in IC [7270] is used for carrier preparation, the oscillator frequency [4.433619 MHz] of which is determined by the crystal [1030] connected at pins 30 and 32. The APC detector REC compares the phase of the incoming transmitter burst with that of the VCXO, adjusting it accordingly. This regulation voltage at IC [7270-(28)] is smoothed with [2399, 2300] and [3300]. An oscillator [321 fH VCO] integrated in IC [7270] is also used, the middle frequency of which is determined by the parallel oscillation circuit at pin 20. This oscillator is controlled by the line frequency. The VCO oscillates at a multiple of the line frequency (321 fH = 5.015625 MHz). This frequency is divided by 8 [rotary] in a decrementer and is routed to the sub-mixer [SUB BM]. Here, it is mixed with the oscillator frequency of the VCXO [4.433619 MHz]. This results, amongst other things, in the 5.06 MHz sub-carrier. This passes through an external 5.06 MHz band-pass filter [between pins 36 and 1] and then enters the main mixer [MAIN BM].

- Playback [NTSC/PAL]

For playback, the XO crystal oscillator [VCXO], oscillating freely on the crystal frequency (4.433619 MHz), and the 321 fH VCO oscillator, the middle frequency of which is determined by the parallel oscillation circuit at pin 20, are used as a reference. The VCO is then synchronised from the burst of the played back colour signal after the chroma signal is remixed from 627 kHz to a 4.43 MHz colour-carrier frequency. For this, the PB-APC stage (APC DET PB) produces the regulating voltage for the VCO and compares the phase of the re-mixed 4.43 MHz burst with that of the crystal oscillator. The time constant of the filter at IC [7270-(27)] is provided by [2297, 2296] and [3296]. This frequency is divided by 8 in the decrementer [1/8] [rotary] and enters the sub-mixer [SUB BM]. It is then mixed with the oscillator frequency of the XO. This results in, amongst other things, the sub-carrier of 5.06 MHz. The latter enters the main mixer [MAIN BM] via an external band filter [as in recording].

15. Operating part (Display Control)

15.1. Front Controller

The mask-programmed 8-bit microcontroller [7060] (Front Controller, FC) on the DC board operates as a sub-controller. It activates various function groups on the DC board and the local front keyboard board and evaluates their signals. The correct operation of the FC requires a functioning communication with the Central Controller (CC) [7035] on the motherboard. The FC is physically connected to the motherboard via connector [1510]. The communication is serial and bi-directional with a TTL level via a modified three-line-I2C-Bus by lines SCL (port P3.6/pin 23), SDA (P3.7/pin 24) and Bus-Init (P1.1/pin 2). At SCL and SDA, the signals are standard I2C-Bus signals. The Bus-Init line transmits a decreasing slope as starting condition for a Multimaster-I2C-Bus communication between the CC and the FC in the High-Speed

mode. In the Normal operating mode, the ceramic 8 MHz resonator [1060] functions at inputs XIN/XOUT (pin 13/14) and the 32,768 kHz crystal [1062] at inputs XTIN/XTOUT (pin 10/11).
The system cycle is thus 8 MHz. In the LOW-POWER and Mains-Off operating modes, only the crystal is active. The system cycle is 32,768 kHz in this case.
A defined reset of the FC can be triggered by a LOW pulse at pin 12 of the FC. The generation of the pulse is controlled by IC [7019] on the motherboard. A LOW pulse is transmitted to the circuit group around transistor [7050] via pin 10 of connector [1510], where the rising slope of the pulse generates a LOW level at pin 12 of the FC for approx. 1 msec.

The functions of the FC and the circuit groups arranged on the DC board/flap board are as follows:

- Activate the VFD display
- Determine and control the operating mode of the entire unit
- Adjust the clock cycle
- Receive and decode IR remote control signals
- Query the functional keys
- Activate various LEDs
- Monitor and control the backup system
- Reset and interrupt control
- Various input sockets

15.2. Control and supply of the VFD display

The VFD display is, in principle, a tube triode, with the heating filaments of the tube forming the cathode.
The digits and symbols are triggered by a time-multiplexing process (duty 1:16, scanning period 3.9 ms (16 x 244.14 µs), voltage range +5V / -28 V). A dimmer function is provided by pulse width modulation of the grid activation signals. During maximum display brightness, the pulse width for each grid is 214 µs. With the use of software, the width can be reduced to 30 µs in 7 stages, reducing the brightness of the VFD for the naked eye accordingly.

A display digit or symbol only illuminates, if the corresponding anode and its surrounding grid are switched to +5 V for a certain time during the scanning period. The electrons emitted by the cathode are thus accelerated by the positively charged grid and come into contact with the luminous layer of the anode which is also positively charged.
During the remainder of the scanning period, the corresponding grid is at -28 V, due to an internal pull-down resistor in the FC. As this potential is lower than the average cathode potential of approx. -21 V, an acceleration of electrons is avoided, thus providing a certain dimming of the associated anode segments.
The filament voltage for the VFD filament (U~ = 6.5Veff , f = 31.25kHz) is applied by the power supply to pins F1 and F2 of the VFD display via lines HELO and HELI (connector [1510/- 13 and -11]). The Z diode [6070] fixes the alternating filament voltage to approx. -21 Volt via resistor [3074]. Directly in between pins F1 and F2, the alternating filament voltage is approx. 4.1 Veff due to resistors [3073] and [3075].

15.3. Activation of the power supply and clock adjustment

The FC applies two control signals to the power supply.
In the first instance, the FC causes the power supply to generate the filament voltage for the VFD display (see section 2). For this purpose, the FC provides a control signal with a frequency of 31.25kHz via port P5.5/pin 80. This control signal is passed to the power supply via the HEST line at socket [1510/-1] and transistor [7011] on the motherboard. The associated circuit group supplies the filament voltage to the DC board and therefore the VFD display via the HELO and HELI lines. In the LOW-POWER and Mains-Off operating modes, port P5.5 has a HIGH level. No filament voltage for the VFD display is provided.
The HEST line and thus port P5.5 can emit a square wave signal with Fsoll = 2048 Hz in the service mode. The clock adjustment can be carried out with a variable capacitor [2060] and a frequency meter connected to port P5.5. Secondly, the FC is also able to switch the power supply to the "Low Power" operating mode via the STBY line (connector [1510/-14]). In this mode, the power supply only supplies the 5STBY operating voltage, reducing the energy consumption to a few 100mW. The Low Power mode is therefore also called <1-watt mode.

A change to the Low Power Mode is activated by the level of P5.4/pin 79 changing from HIGH to LOW. Transistor [7010] becomes conductive as a result of the level change. The collector and thus contact 14 of the connector [1510] contain a HIGH level. The HIGH level is passed to the associated circuit group of the power supply, changing it to the desired Low Power mode.

15.4. IR receiver and signal evaluation

The IR operating voltage is only available in the "Normal" operating mode. In addition to a photodiode, the IR receiver [7035] contains a selective controlled amplifier. The photodiode converts the radiation (approx. 940 nm) into electrical pulses which are then amplified and demodulated. The output signal of the IR receiver is read in as a TTL level pulse train via the interrupt input INT3/P3.0 (pin 17) of the FC. By evaluating the pulse train, the FC recognises the command emitted by the IR remote control and carries out the instructions linked to this command.

15. 5. Keypad (keys)

A keypad input is only possible when the FC is in the Normal-2 mode. Output ports P9.5 to P9.7 [pin 63-65] of the FC are assigned a HIGH level (+5 V) for 40 µs at different times. These signals are either applied to the keys directly or via the connector contacts [1516/4 and -/5]. When a key is depressed, the FC reads in one HIGH level during each keyscan period (16,384 ms) either directly or via connector [1516/1-3] and the associated input ports P40/KEY0 to P43/KEY3 (Pin 67-70). If no key is depressed, the inputs via the internal pull- down resistors of port P4 are at LOW level (0 V).

15. 6. Shuttle (optional)

The shuttle is a binary-encoded rotary switch with a _70_ rotating angle and 16 switching conditions. A spring returns the switch into its centre position once released, from which 7 to 8 further switching conditions can be activated on either side. All switching conditions are implemented with voltage 5D1 by different connections of the four different shuttle outputs SHA-SHD. The levels of outputs SHA-SHD are passed via the plug-in contacts [1515/-1...4] to the input ports P3.2 - P3.5. If the SHA-SHD outputs are not at HIGH level, the relevant ports are at LOW potential via the external pull-down resistors [3080, 3081, 3083 u. 3084]. The FC evaluates the supplied levels and starts the corresponding actions.

15. 7. Jog (optional)

The Jog on the PDC GN 12 board contains a continuously rotatable pulse generator without earth connection. The generator contains ten latching positions per revolution and two outputs, supplying two square wave signals that are phase-displaced to one another with a level of 0 V or 5 V when turning the Jog. Upon turning the Jog, the operating voltage 5D1 at connector [1515/-9] is connected in sequence with outputs JOG-A and JOG-B, depending on the rotary direction.
The square wave signals generated in this way are passed to the PDC GN 1b board via pins 8 and 10 of connector [1515]. The signals are then debounced by the RC elements [3078, 3079, 2078 or 3076, 3077, 2077] and provided to the FC via ports P4.4/pin 71 and P4.5/pin 72 for evaluation.
The associated Interrupt-Service routine of the FC can detect the rotary direction (left/right) of the Jog from the characteristic phase displacement of the two signals (JOG-A HIGH, JOG-B LOW or vice versa).

15. 8. FBAS detection (Scart control)

The FC, and thus the entire unit, can be changed from the LOW-POWER mode to Normal mode by a defined level change at port P2.0/pin16. The activation of a TV set can be detected via a Scart line connected to the recorder. In this case, the detection circuit identifies a FBAS or a noise signal. The SCART-CONTROL line at connector [1510/4], which is HIGH active in the release state, is pulled down to LOW level. Port P2.0 of the FC thus also contains a LOW level. The FC detects the level change and returns the power supply to the Normal mode by a HIGH level at port P5.4.
Once the LOW-POWER mode of the power supply has been activated by pressing the ON/OFF key on the remote control or on the DC board, the power supply remains in the LOW-POWER mode

even if the TV remains switched on. Only after the level on the SCART-CONTROL line has been changed from LOW to HIGH by switching off the TV set, can the power supply be switched on by another level change from HIGH to LOW.
To suppress interference on the SCART-CONTROL line, the FC only reacts to a falling slope at port P2.0, if at least 2s have passed since the rising slope.

15. 9. Backup-System

The Goldcap capacitor [2019] on the motherboard secures the operating voltage and function of the FC even in the Mains-Off mode in case of disconnection from the mains via resistor [3024] (2.2kW) and the 3VB connector line [1510/16]. In the LOW-POWER mode, the FC is supplied by the 5VSTBY supply voltage. At the same time, the capacitor is charged via line 3VB and resistor [3024]. In Normal mode, the capacitor is charged directly by the operating voltage 5A1 and diode [6066]. With the capacitor fully charged, correct functioning of the FC can be guaranteed for at least 7 hours in case of disconnection from the mains. If the mains voltage is recovered within this defined backup time, the time and date registers are maintained. If the mains voltage is recovered after expiry of the backup time, the relevant time and date registers are overwritten with a defined fault code. The set is in Normal mode after applying the mains voltage and the capacitor is charged. The charging via diode [6066] is instant and, even in the case of an immediate, repeated disconnection, a full 7 hours of backup time is guaranteed.

15.10. Reset and Interrupt control

The RESET switching stage of transistor [7055] facilitates an exact control of the FC during the transition between the various modes. This is achieved with precisely defined levels or level changes on input port INTO (P1.0/pin 1) and the reset input (pin 12) of the FC.

Transition from the Mains-Off operating mode to the Normal or LOW-POWER operating mode:

If the FC is supplied by the backup capacitor [2019] during Mains-Off, the FC operates in energy-saving Sleep-Slow mode. If, however, the backup time was exceeded in the Mains-Off mode, the FC operates in the Stop mode. In both modes, all ports are in a TRISTATE condition. Once the mains voltage is reapplied, the mains part immediately enters Normal mode and all operating voltages are generated. The CC on the motherboard is consequently reset. The CC then activates a reset of the FC (FC RESET) via the shift register [7019] on the motherboard. Consequently, a voltage of approx. 4.4 V is generated on the cathode of diode [6052] after the level change. The capacitor [2050] is charged via resistor [3053] and the series connection of resistor [3055] with the base emitter route of transistor [7055]. Transistor [7055] becod on the STBY line and the power supply changes to the Normal mode. The CC is reset, followed by the operations detailed in the previous chapter.

Transition from the Normal to the LOW-POWER operating mode:

By pressing the Standby key on the DC board or the remote control, the FC initially changes to Slow mode because of a command issued by the CC. The FC then generates a LOW level at port P54/pin 79, changing the power supply to the LOW-POWER mode. The 5VSTBY voltage supplies the FC and only the 32,768ke. During this operating mode, inputs INT0, P1.2 and Reset (pin 1, 2 and 12) of the FC are each at HIGH level.

Transition from the LOW-POWER to the Normal operating mode:

In the LOW-POWER operating mode, the power supply is maintained in the Standby mode. To achieve this, the port P5.4/pin 79 of the FC is at LOW level. This causes a HIGH level at the collector of transistor [7010]. Line STBY at the plug-in contact [1510/-14] is consequently also at HIGH level. The level passes to the power supply, maintaining it in the desired mode. The energy supply of the FC is provided by the 5VSTBY voltage. The FC itself is in Slow mode. In order to detect whether a transition to the Normal operating mode is to be made, the FC monitors ports P0.0/pin 25 and P2.0/pin 16. Upon activation of the ON/OFF button (change LOW->HIGH), or in case of a positive FBAS detection (change HIGH->LOW), a level
change takes place. The FC switches port P5.4 to the TRISTATE condition. The transistor [7010] blocks; a LOW level is generated on the STBY line and the power supply changes to the Normal mode. The CC is reset, followed by the operations detailed in the previous chapter.

Transition from the Normal to the LOW-POWER operating mode:

By pressing the Standby key on the DC board or the remote control, the FC initially changes to Slow mode because of a command issued by the CC. The FC then generates a LOW level at port P54/pin 79, changing the power supply to the LOW-POWER mode. The 5VSTBY voltage supplies the FC and only the 32,768kHz crystal is active. At the same time it detects a HIGH level via port P1.2/pin 3, due to the 5VSTBY voltage, and remains in Slow mode. A level change at pin 1/INT0 has no effect during this operating mode change.

Transition from the LOW-POWER to the Mains-Off operating mode:

Once disconnected from the mains, the mains supply no longer provides an operating voltage. A LOW level is thus generated at port P1.2/pin 3 of the FC. The FC changes from Slow to Sleep-Slow mode. All FC ports gain a high-resistance. The energy is supplied by the backup capacitor [2019]. The clock and calendar functions of the FC are maintained during the backup period.

Transition from the Normal to the Mains-Off operating mode:

A mains disconnection is carried out in the Normal mode. The detection circuit on the motherboard detects a decreasing 5D1 operating voltage. On the FC-RESET line, and consequently at port P1.0 of the FC, a decreasing slope is generated via IC [7019] and the pull-down resistor [3049]. The FC detects this level change and switches immediately to Sleep-Slow mode. The backup capacitor [2019] supplies the FC.

15.11. Input sockets

An external video or audio signal can be fed into the recorder via the three Chinch sockets [1902] for further processing. Via the Edit socket [1900] a re-recording process can be controlled with a camera. For this purpose, the EDIT-TRIGGER and PREROLL signals are passed via socket [1900] and the plug-in contacts [1510/ - 9 and -/7] to the motherboard for further processing.

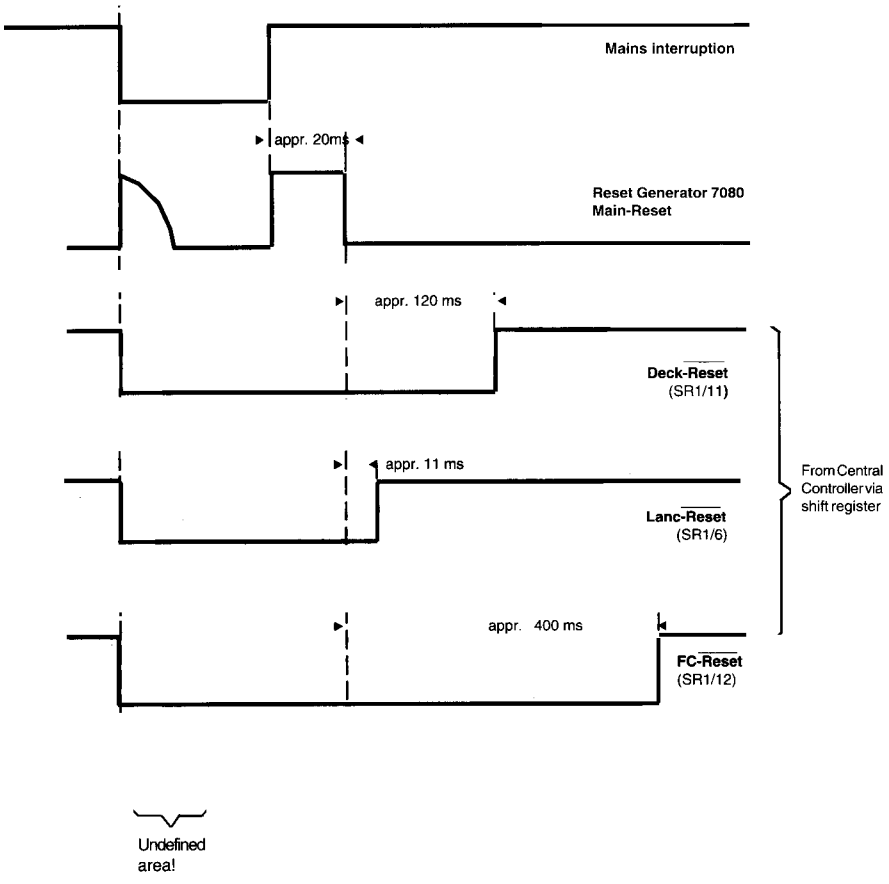

Reset Generation

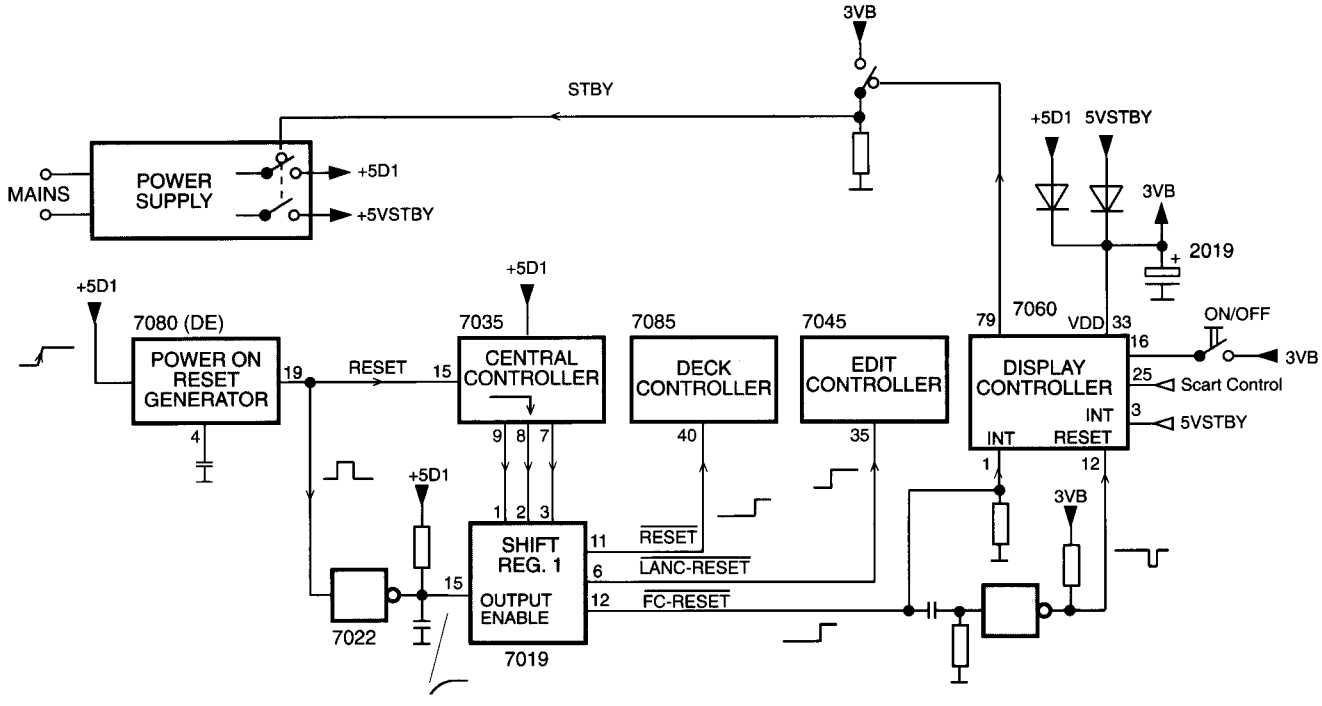

Reset Generation

17. Block Diagram Control

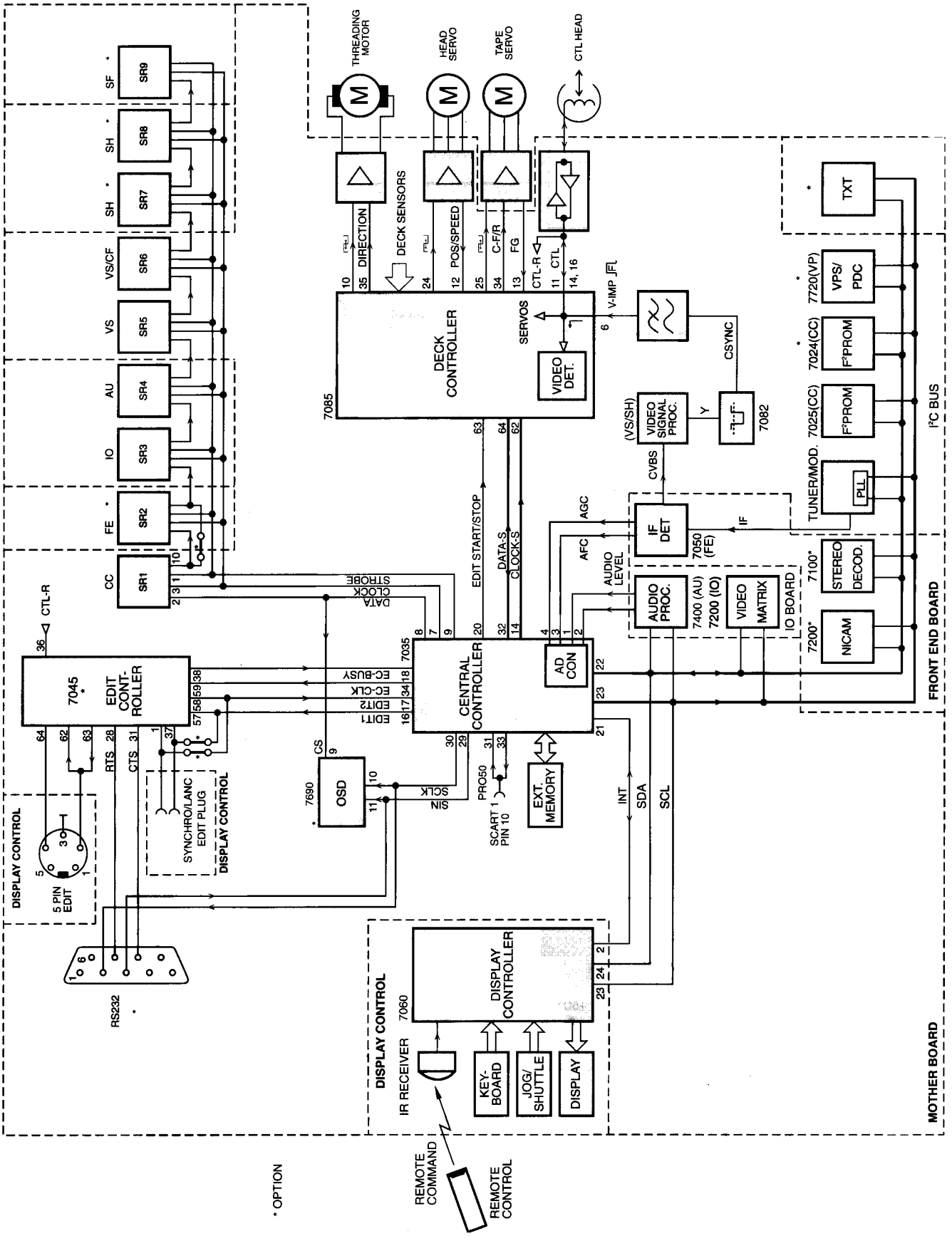

PRINTED CIRCUIT BOARDS

Electrical Alignment Instructions

Measuring Equipment:

1. Two-channel oscilloscope
   Voltage range : 0.001 ~ 50 V/div
   Frequency : DC ~ 50 MHz
   Probe : 10:1, 1:1
2. Digital voltmeter (DVM)
3. AF millivoltmeter
4. Frequency counter
5. Sinus generator
   Sinus : 0 ~ 50 MHz
6. Test pattern generator with stereo modulation
7. VHS Alignment Tape 4822 397 30103
   SPC Alignment Tape 4822 397 30268

Explanation of Alignment Instructions:

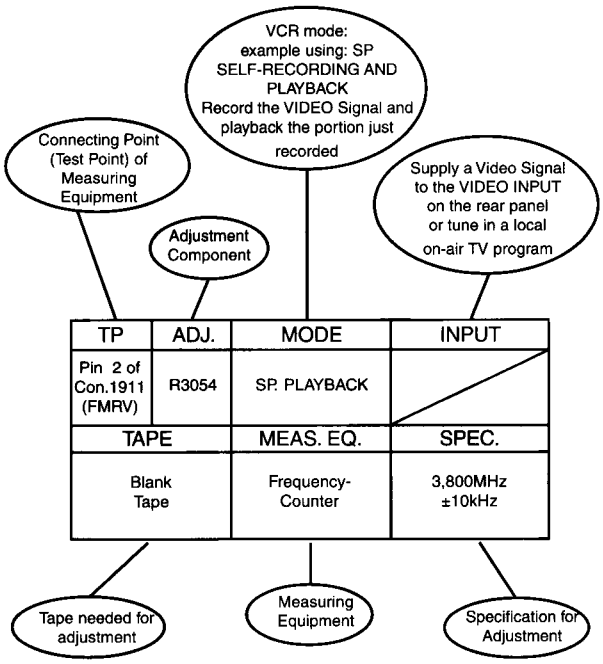

. Cinch audio input

. Aerial input

. Euro AV socket (SCART)

The following symbol shows testing points in the circuits and component plans: ▽1

1. Power Supply PSM (PS)

1.1 Setting the output voltage +5A :

Purpose: Setting the supply voltage to correct value.

Symptom if incorrectly set:
Incorrect operation of VCR functions.

TP	ADJ.	MODE	INPUT
1509-16; Ground at 1509-10	R3078	Playback	
TAPE		MEAS. EQ.	SPEC.
Any tape		DC Voltmeter	5,3V ±0,05V

2. Frontend End Board (FE) / Mother Board Tuner/Modulator (TM)

Service operations after replacing

- the Mother Board: 2.2, 2.4, 2.5
- the FE Board: 2.2, 2.4, 2.5
- IC 7050: 2.1, 2.2, 2.4, 2.5, 2.6 (SECAM L), 2.7
- IC 7100: 2.4
- the Tuner/Modulator: 2.2, 2.5

2.1 Picture demodulation circuit(AFC-ADJ)

Purpose: Correct setting of demodulator AFC circuit.

Symptom if incorrectly set:
Bad or disturbed reception of TV stations.

TP	ADJ.	MODE	INPUT
83 [1624/3]	AFC-ADJ 1040	E to E	38.875MHz, test picture, TP 82 (FE) [1624/10]
TAPE		MEAS. EQ.	SPEC.
		DC Voltmeter, Video Pattern Generator	2,5V ± 0,1V

2.2 RF AGC take over point (AGC-ADJ)

Purpose: Setting the RF-AGC take-over point.

Symptom if incorrectly set:
AGC does not synchronise correctly if input level is too weak. Input levels which are too strong, may cause picture interference.

Before adjustment ensure that

- unit is warmed up.
- capacitor 4.7 pF is soldered to TP 82 [1624/10]

TP	ADJ.	MODE	INPUT
82 via 4.7pF capacitor	AGC-ADJ R3800 on (TM)	E to E	2,2mV (67dB$_{\mu V}$) PAL, CH26 (511.25), audio IF on, no audio modulation
TAPE		MEAS. EQ.	SPEC.
		Oscilloscope Video Pattern Generator	100mV$_{pp}$ (use a 10:1 probe)

2.3 Chroma amplitude adjustment (CHR-ADJ)

Purpose: Adjustment of optimum Chroma amplitude.

Symptom if incorrectly set:
Possible reduced colour quality.

Before adjustment ensure that

– unit is warmed up.

TP	ADJ.	MODE	INPUT
85 [1624/5]	CHR-ADJ 3159	E to E	2,2mV (67dB$_{\mu V}$) PAL, CH26 (511.25) audio modulation off
TAPE		MEAS. EQ.	SPEC.
		Oscilloscope Video Pattern Generator	refer to description below

– Adjust burst amplitude to match Sync pulse size with 3159

2.4 Stereo decoder crosstalk

Purpose: Prevent crosstalk of AF channels.

Symptom if incorrectly set:
Crosstalk of AF channels.

Before adjustment ensure that

– service test program is activated (simultaneous activation of remote control STOP key and PLAY key on the recorder for 5 seconds).

TP	ADJ.	MODE	INPUT
84 [1625/7]	Service Mode	Service Mode	Test picture, Stereo sound, i.e. l:3kHz, r: 1kHz
TAPE		MEAS. EQ.	SPEC.
		Oscilloscope Video Pattern Generator	minimum crosstalk, refer to description below

- Coarse adjustment: select step 55 of the service mode. Adjust with the "Up" or "Down" keys.
- Fine adjustment: select step 56 of the service mode. Adjust with the "Up" or "Down" keys.

The values will be stored in EEPROM 7025.

2.5 ATS threshold

Purpose: Setting the ATS threshold value for establishing the transmitter sequence according to the received field strength during automatic station search.

Symptom if incorrectly set:
Transmitters without VPS or PDC identification cannot be ordered in the best sequence.

Before adjustment ensure that

– service test program is activated

TP	ADJ.	MODE	INPUT
	Service Mode	Service Mode	50dB$_{\mu V}$ PAL, CH26
TAPE		MEAS. EQ.	SPEC.
Any tape		Video Pattern Generator	Step 54, automatic adjustment

Values are stored in EEPROM 7025.

2.6 Picture demodulator circuit, SECAM band I (3047)

Purpose: Correct setting of demodulator AFC circuit.

Symptom if incorrectly set:
Bad or disturbed reception of TV stations.

TP	ADJ.	MODE	INPUT
83 [1624/3]	3047	E to E, SECAM L' tuned on this preset!	33.375MHz at TP 82 [1624/10]
TAPE		MEAS. EQ.	SPEC.
		DC Voltmeter, Video Pattern Generator	2,5V ± 0,1V

2.7 'Follow TV' amplitude (FMA) (optional)

Adjustment after replacing:
IC 7320 (VS), IC 7050 (FE)

Purpose: Correct adjustment of Follow TV circuit.

Symptom if incorrectly adjusted:
Incorrect functioning of Follow TV or Direct Record

Before adjustment ensure that

– service test program is activated, Step 57

TP	ADJ.	MODE	INPUT
20 [7832/ Collector]	FMA R3849 on (TM)	Service Mode	1) >60dB$_{\mu V}$, 100% white, 2) AV 1, Testpicture 100% white, 1V$_{pp}$ (same generator)
TAPE		MEAS. EQ.	SPEC.
Any Tape		Oscilloscope Video Pattern Generator	refer to picture below

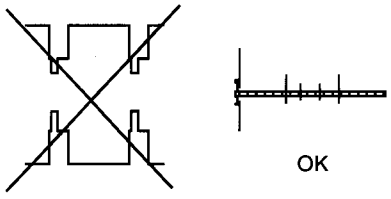

3. Mother Board SECAM (SE)

Service operations after replacing

– the Mother Board: none

3.1 Chroma writing current (SCWC)

Purpose: Set optimum recording chrominance level.

Symptom if incorrectly set:
If the chrominance levels are too high, picture interference may occur; if the chrominance levels are too low, colour quality may be reduced.

TP	ADJ.	MODE	INPUT
91[7583/B] Trigger: Video Output	SCWC R3581	Record	SECAM Testpicture Colour Bar
TAPE		MEAS. EQ.	SPEC.
Any Tape		Oscilloscope Video Pattern Generator	refer to picture below

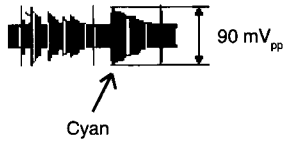

4. Mother Board VHS-Videosignal-Verarbeitung (VS)

Service operations after replacing:

– the Mother Board, the head disk, IC 7600: 4.4
– the IC 7320: 4.1, 4.2, 4.3

4.1 Luminance writing current (AY)

Purpose: To set the optimum recording luminance level.

Symptom if incorrectly set:
If the level is too high or low, picture interference may occur

TP	ADJ.	MODE	INPUT
52 [C2268]	AY R3479	Record	AV 1 100% white testpicture
TAPE		MEAS. EQ.	SPEC.
Any Tape		Oscilloscope Video Pattern Generator	300mVpp

4.2 Chroma recording current PAL (CAP)

Purpose: To set the optimum recording chrominance level.

Symptom if incorrectly set:
If the level is too high, picture interference may occur; if the level is too low, colour quality may be reduced.

Before adjustment ensure that

– oscilloscope is applied to TP 52 [C2268], and white test picture to AV 1.
– measure value V_A is noted.
– TP 32 is connected to ground.

TP	ADJ.	MODE	INPUT
51 [C2187]	CAP R3387	Record	AV 1 red testpicture
TAPE		MEAS. EQ.	SPEC.
Any Tape		Oscilloscope Video Pattern Generator	$V_A / 2$

– Disconnect TP 32 from ground

4.3 S-VHS Detection (REFS, REFV) (optional)

Purpose: Manual alignment of S-VHS recognition.

Symptom if incorrectly set:
During playback, the S-VHS or VHS status is not recognised correctly.

Before adjustment ensure that

– a 100% white test picture is applied to AV 1 and recorded.
– recording is played back.

TP	ADJ.	MODE	INPUT
1) 34, 35 2) 34, 36	1) REFS R3508 2) REFV R3503	Playback	
TAPE		MEAS. EQ.	SPEC.
Any Tape		DC Voltmeter, Video Pattern Generator	refer to description below

1)
– Measure voltage values at TP 34 [C2279]; value = V_{34S}.
– Set to V_{34S} + 0.35V with 3508 voltage at TP 35 [R3508].
2)
– TP33 (collector of 7280) is then connected to ground.
– Measure voltage values at TP 34; value = V_{34V}.
– Set to V_{34V} + 0.25V with 3503 voltage at TP 36 [R3503].
– Disconnect from ground.

4.4 Studio Picture Control SPC (optional)

Purpose: Setting the SPC reference level.

Symptom if incorrectly set:
Occasional picture loss or picture display at lower resolution than possible.

Before adjustment ensure that

- SPC alignment tape is inserted
- Call up service test program

TP	ADJ.	MODE	INPUT
		Stop Service Mode	⌐ or AV 1 grey or red Testpicture
TAPE		MEAS. EQ.	SPEC.
SPC Alignment Tape			Call up Step 52 of Service Mode

After calling up step 52, the recorder will make a SP recording (approx. 16s), rewind and start to play back the adjustment.
After the adjustment has been carried out, the VCR switches to STOP, displaying "READY" if the adjustment was successful, or "FAILED" if the adjustment was unsuccessful.

The adjustment values are stored in EEPROM 7025.

5. Mother Board Deck Electronics (DE)

Service operations after replacing

- the Mother Board, the head disc: **5.1**

5.1 Head disk gap position

Purpose: Determining the head switch-over pulse during playback.

Symptom if incorrectly set:
Head switch-over faults and/or vertical picture flickering.

Before adjustment ensure that

- VHS alignment tape is inserted
- service test program is activated

TP	ADJ.	MODE	INPUT
		Service Mode	
TAPE		MEAS. EQ.	SPEC.
VHS Alignment Tape			Call up Step 51 of Service Mode

After a successful adjustment, the recorder automatically switches to the STOP mode and displays "READY".

An unsuccessful adjustment may be due to:
an incorrect standard video signal
a defective scanner
a defective microprocessor

The adjustment values are stored in EEPROM 7025

6. Mother Board On Screen Display (OS)

Service operations after replacing:

- the Mother Board: -
- 7690, 1108, 2695, 2697, 2698: 6.1
- 7690, 1104, 2692, 2694: 6.2

6.1 OSD Crystal oscillator (OSD-SC)

Purpose: Adjusting the exact quartz frequency

Symptom in case of incorrect adjustment:
Incorrect functioning of the OSD

Before adjustment, the following preparations are required:
Connect pin 23 (reset) of IC 7690 to earth.

TP	ADJ.	MODE	INPUT
9 [7690/5]	C2695	E-E	
TAPE		MEAS. EQ.	SPEC.
		Frequency counter	17 734 475 Hz ± 50 Hz

- Remove short circuit
- To initialise, switch recorder off and on again

6.2 OSD LC-Oscillator (OSD-LC)

Purpose: Adjusting the letter width and position

Symptom in case of incorrect adjustment:
Incorrect letter width and position

Before adjustment, the following preparations are required:
Connect pin 23 (reset) of IC 7690 to earth.

TP	ADJ.	MODE	INPUT
10 [7690/8]	1104	E-E	
TAPE		MEAS. EQ.	SPEC.
		Frequency counter	6.6 MHz ± 0.1 MHz

Remove short circuit
To initialise, switch recorder off and on again

7. In/Out Board Audio (AU)

Service operations after replacing:

- the head disk: 7.1, 7.2
- the In/Out Board: 7.1, 7.2, 7.3, 7.4
- the IC 7400: 7.1, 7.2
- the combi-head: 7.3, 7.4 + electro-mechanical adjustment (chapter 4)

7.1 FM envelope voltage (FME)

Purpose: Setting the frequency deviation.

Symptom if incorrectly set:
Incorrect deviation during recording.

TP	ADJ.	MODE	INPUT
22 [1637/3]	FME R3485	Playback	
TAPE		MEAS. EQ.	SPEC.
VHS Alignment Tape, FM Audio section		Oscilloscope	$3.6V_{pp}$ refer to picture below

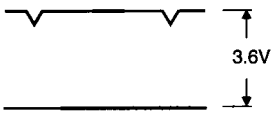

7.2 Sound envelope voltage (AEL, AER)

Purpose: Setting the IC amplification control.

Symptom if incorrectly set:
Sound is recorded too low, i.e. the signal-to-noise-ratio is too low or overmodulated.

Before adjustment ensure that

– 400 mV_{rms} is fed to Cinch input ⊖.
– the service test program is activated, Step 61, Step 61

TP	ADJ.	MODE	INPUT
23 & 24 [1637/ 7&6]	AEL, R3408 AER, R3410	Service Mode 61	⊖ $400mV_{rms}$, 1kHz
TAPE		MEAS. EQ.	SPEC.
Any Tape		Oscilloscope	1.4V

Set values are stored in EEPROM 7025.

7.3 Bias current (BIAS)

Purpose: Setting the optimum bias current for recording.

Symptom if incorrectly set:
If the level is too high, the frequency response deteriorates, if it is too low, harmonic distortion increases.

TP	ADJ.	MODE	INPUT
25 [1505/3]	BIAS R3645	Record	
TAPE		MEAS. EQ.	SPEC.
Chromium Dioxid Tape		Oscilloscope with probe 10:1, Sinus Generator	$22mV_{pp}$...$62mV_{pp}$

Controlling the bias setting:

– Feed 5 mV_{rms} (14 mV_{pp}) audio signal from sinus generator to Cinch input (⊖ rear of unit).
– Record for 1 minute at 400 Hz and 8 kHz onto a brand name chromium dioxide tape.
– Playback the recording.
– Connect AF millivoltmeter (oscilloscope) to contact 1/3 of AV1 or to Cinch output (⊖ rear of unit).
– The voltage ratio must not exceed ±3dB.

Increase playback voltage at 8 kHz: decrease bias.

7.4 Playback level

Purpose: Setting the playback level of the audio linear part.

Symptom if incorrectly set:
Playback too faint or overmodulated.

Before adjustment ensure that

– sinus is fed with 333 Hz; 0.4 V_{rms} to Cinch input ⊖.
– recording button is activated.
– service test program is activated, Step 58

TP	ADJ.	MODE	INPUT
	Service Mode	Service Mode	
TAPE		MEAS. EQ.	SPEC.
Chromium Dioxid Tape		Sinus Generator	Step 58, automatic adjustment

The adjustment values are stored in EEPROM 7025.
In case of an incorrect adjustment with the voltage difference between linear audio and FM audio being > 1 dB, "LIN ERR" appears on the display, i.e. the audio linear switching part is faulty.

8. Display Control (DC)

Service work after replacement:
- of the quartz clock: 8.1

8.1 Timer Clock Frequency (2060)

Purpose: Adjustment of the exact clock frequency

Symptom in case of incorrect adjustment:
The clock is too fast or too slow

Before adjustment, the following preparations are required:

- Call up the Service Test Program, select step 99.
  After the call up with select, the display dims and all functions and operations of the recorder stop!

TP	ADJ.	MODE	INPUT
[1921/16]	C2060	Service Mode, Step 99	
TAPE		MEAS. EQ.	SPEC.
		Frequency counter with 7 digits	2048.000Hz

The adjustment must be terminated with a mains reset!

9. S-VHS Board Luminance Processing (SH)

Service work after replacement:
of the S-VHS Board: -

9.1 Recording Level (REC)

Purpose: To set the optimum luminance level during recording

Symptom in case of incorrect adjustment:
A level which is too high or too low results in interference.

TP	ADJ.	MODE	INPUT
6 [7700/14]	REC R3487	Record	AV 1 100% white testpicture $1V_{pp}$
TAPE		MEAS. EQ.	SPEC.
S-VHS Tape		Oscilloscope Video Pattern Generator	$400mV_{pp}$

Symptom in case of incorrect adjustment:
A level which is too high or too low results in interference.

TP	ADJ.	MODE	INPUT
2 [7520/43]	EE R3637	Record	AV 1 100% white testpicture $1V_{pp}$
TAPE		MEAS. EQ.	SPEC.
S-VHS Tape		Oscilloscope Video Pattern Generator	$1V_{pp}$

9.3 White Clip (WC)

Purpose: To set the optimum white clip during recording

Symptom in case of incorrect adjustment:
A level which is too high or too low results in interference.

TP	ADJ.	MODE	INPUT
4 [7520/19]	WC R3515	Record, VHS, SP	AV 1 100% white testpicture $1V_{pp}$
TAPE		MEAS. EQ.	SPEC.
Any Tape		Oscilloscope Video Pattern Generator	refer to picture below

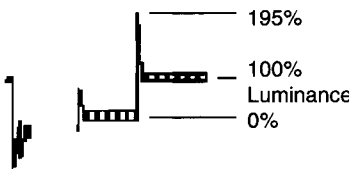

9.4 Dark Clip (DC)

Purpose: To set the optimum black clip during recording

Symptom in case of incorrect adjustment:
A level which is too high or too low results in interference.

TP	ADJ.	MODE	INPUT
4 [7520/19]	DC R3521	Record, VHS, SP	AV 1 100% white testpicture $1V_{pp}$
TAPE		MEAS. EQ.	SPEC.
Any Tape		Oscilloscope Video Pattern Generator	refer to picture below

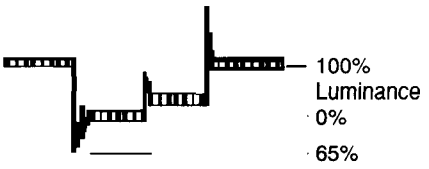

9.5 VHS Synchronising Value (SV-VHS)

Purpose: To set the correct synchronising value during VHS recording

Symptom in case of incorrect adjustment:
The VHS standard is not maintained

TP	ADJ.	MODE	INPUT
3 [7520/25]	SV-VHS R3503	Record, VHS, SP	AV 1 no input signal
TAPE		MEAS. EQ.	SPEC.
Any Tape		Frequency counter	3.8 MHz

9.6 S-VHS Synchronising Value (SV-S-VHS)

Purpose: To set the correct synchronising value during S-VHS recording

Symptom in case of incorrect adjustment:
The S-VHS standard is not maintained

TP	ADJ.	MODE	INPUT
3 [7520/25]	SV-S-VHS R3509	Record, S-VHS, SP	AV 1 no input signal
TAPE		MEAS. EQ.	SPEC.
S-VHS Tape		Frequency counter	5.4 MHz

9.7 VHS White Value (WV-VHS)

Purpose: To set the correct white value during VHS recording

Symptom in case of incorrect adjustment:
The VHS standard is not maintained

TP	ADJ.	MODE	INPUT
3 [7520/25]	WV-VHS R3507	Record, VHS, SP	AV 1 100% white picture
TAPE		MEAS. EQ.	SPEC.
Any Tape		Frequency counter	4.62 MHz

9.8 S-VHS White Value (WV-S-VHS)

Purpose: To set the correct white during S-VHS recording

Symptom in case of incorrect adjustment:
The S-VHS standard is not maintained

TP	ADJ.	MODE	INPUT
3 [7520/25]	WV-S-VHS R3513	Record, S-VHS, SP	AV 1 100% white picture
TAPE		MEAS. EQ.	SPEC.
S-VHS Tape		Frequency counter	6.67 MHz

9.9 Luminance Recording Current (YWV)

Purpose: To set the optimum luminance level during recording

Symptom in case of incorrect adjustment:
A level which is too high or too low results in interference

TP	ADJ.	MODE	INPUT
52 [C2268]	YWV R3765	Record S-VHS	AV 1 100% white testpicture
TAPE		MEAS. EQ.	SPEC.
S-VHS Tape		Oscilloscope Video Pattern Generator	250mV$_{pp}$

9.10 Playback Amplitude

Purpose: To set the optimum luminance level during playback

Symptom in case of incorrect adjustment:
A level which is too high or too low results in interference

Before adjustment, the following preparations are required:
- Supply a 100% white test picture to AV 1 and record; VHS and S-VHS
- Play back the recording

9.10.1 VHS Playback Amplitude (PBA-VHS)

TP	ADJ.	MODE	INPUT
6 [7700/14]	PBA-VHS R3543	VHS Playback of own recording of white picture	
TAPE		MEAS. EQ.	SPEC.
VHS Tape		Oscilloscope Video Pattern Generator	400mV$_{pp}$

9.10.2 S-VHS Playback Amplitude (PBA-S-VHS)

TP	ADJ.	MODE	INPUT
6 [7700/14]	PBA-S-VHS R3545	S-VHS Playback of own recording of white picture	
TAPE		MEAS. EQ.	SPEC.
S-VHS Tape		Oscilloscope Video Pattern Generator	400mV$_{pp}$

9.11 Drop Out Level (DP)

Purpose: To set the correct amplitude of the drop out correction signal

Symptom in case of incorrect adjustment:
Drop out compensation not operating correctly.

Before adjustment, the following preparations are required:
- Supply a 100% white test picture to AV 1 and record; VHS and S-VHS
- Play back the recording

TP	ADJ.	MODE	INPUT
7 [7520/12]	DP R3723	Playback of own recording	AV 1 100% white testpicture
TAPE		MEAS. EQ.	SPEC.
S-VHS Tape		Oscilloscope Video Pattern Generator	refer to picture below

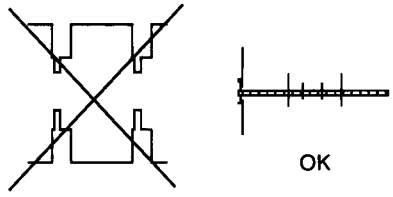

9.12 S-VHS Detection (REFS, REFV)

Purpose: Manual alignment of the S-VHS detection

Symptom in case of incorrect adjustment:
During playback, the S-VHS or VHS status is not recognised correctly

Before adjustment, the following preparations are required:
- Supply a 100% white test picture to AV 1 and record in VHS
- Play back the recording

TP	ADJ.	MODE	INPUT
1) 37, 39 2) 37, 38	1) REFS R3791 2) REFV R3795	Playback of own recording	
TAPE		MEAS. EQ.	SPEC.
S-VHS Tape		DC Voltmeter, Video Pattern Generator	refer to description below

1)
- Connect pin 4 of IC7800 to ground and pin 5 to +5 V
- Measure voltage at TP 37 [1530/7] : value = V37S
- Using 3791, set voltage at TP 39 [1530/10] to V37S +0.35 V
- Remove short circuits

2)
Connect pin 4 of IC7800 to +5 V and pin 5 to ground
Measure voltage at TP 37 [1530/7] : value = V37v
Use 3795 to set voltage at TP 38 [1530/11] to V37v +0.25 V
Remove short circuits

9.13 Studio Picture Control

See 4.4

10. Transcoder Board Chrominance Processing (SF)

Service operations after replacement:

- of the transcoder board:
- of IC7270: 10.1, 10.2, 10.3
- of IC7175: 10.4

10.1 VXO-Adjustment (XO)

Purpose: Adjustment of the sub-carrier frequency

Symptom in case of incorrect adjustment:
Colour faults

TP	ADJ.	MODE	INPUT
41 [1525/12]	XO C2306	Playback PAL	
TAPE		MEAS. EQ.	SPEC.
Any Tape		Frequency Counter	4.433619 MHz ± 20 Hz

10.2 Chroma Writing Current (CHSP)

Purpose: To set the optimum chrominance level during recording

Symptom in case of incorrect adjustment:
A level which is too high results in interference.
A level which is too low results in faint colours.

TP	ADJ.	MODE	INPUT
43 [1524/10]	CHSP R3273	Record	AV 1 colour bar PAL
TAPE		MEAS. EQ.	SPEC.
Any Tape		Oscilloscope Video Pattern Generator	red part: $150mV_{pp}$

10.3 Pilot Burst-Amplitude (PBA)

Purpose: To set the correct pilot burst amplitude during recording

Symptom in case of incorrect adjustment:
S-VHS standard is not maintained

TP	ADJ.	MODE	INPUT
43 [1524/10]	PBA R3295	Record S-VHS	AV 1 colour bar PAL
TAPE		MEAS. EQ.	SPEC.
S-VHS Tape		Oscilloscope Video Pattern Generator	Pilot Burst amplitude = 1.1 x PAL Burst amplitude

10.4 627 kHz Comb Filter (CF)

Purpose: To match the amplitude of the delayed and not delayed signal

Symptom in case of incorrect adjustment:
Colour faults

Before adjustment, the following preparations are required:
- Feed red signal (PAL) to AV 1 and record
- Play back the recording

TP	ADJ.	MODE	INPUT
42 [7166/E]	CF R3167	Playback, own recording, red picture	
TAPE		MEAS. EQ.	SPEC.
any Tape		Oscilloscope Video Pattern Generator	adjust vertical blanking, refer to picture below

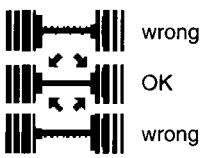

200µs/Div

(D) Hinweis zu den Bauteilen:

Verschiedene Bauteile sind mit einem 'X' oder mit einem 'Y' gekennzeichnet. Es handelt sich hierbei um Bauteile, die nicht in allen Gerätetypen enthalten , sondern vorgesehen (X) oder variantenbezogen sind (Y). Die variantenbezogenen Bauteile sind den Features zugeordnet (siehe Feature-Übersichten).

(F) Information sur les composants:

Certains composants sont identifiés par un 'X' ou un 'Y'. Il s'agit ici de composants qui ne sont pas montés dans tous les modèles d'appareils, mais de composants prévus (X) ou des variantes (Y). Les variantes de composants sont affectées aux diverses versions d'équipements (voir tableaux des versions d'équipements).

(E) Advertencia sobre los componentes:

Diferentes componentes estan marcados con una 'X' o con una 'Y' . Se trata de componentes no contenidos en todos los modelos de aparatos, sino sólo previstos (X) o variantes (Y). Los componentes relacionados con las variantes se encuentran referenciados en las Features (Ver indice de Features)

(GB) Note on the components:

Various components are marked with the letter 'X' or 'Y'. These letters are used to identify components which are not common to all types of recorders but either planned to be fitted (X) or used only in certain variants (Y). The components used for different variants are allocated to the features (see features lists).

(I) Nota sui componenti:

Diversi componenti sono contrassegnati con una 'X' oppure con una 'Y' . Si tratta di componenti che non sono presenti in tutti gli apparecchi, ma previsti (X) oppure varianti (Y). I componenti riferiti alle varianti sono associati alle varie caratteristiche (vedi elenco caratteristiche).

(NL) Aanwijzing voor componenten:

Verschillende componenten zijn met een 'X' of met een 'Y' aangegeven. Het gaat hierbij om componenten die niet in alle modellen aanwezig zijn, maar mogelijk zijn (X) of afhankelijk zijn van het type verwant (Y). De componenten die type afhankelijk zijn, zijn bij de Features aangegeven (zie hiervoor features overzicht).

(D) Schaltplansymbole / (GB) Circuit diagram symbols / (F) Symboles schema (I) Simboli sullo schema / (E) Simbolos en los esquemas / (NL) Schema symbolen

Schaltplansymole für Video-/Chromasignale und Statusbefehle. Circuit diagram symbols for video signals, chroma signals and status commands./Symboles schema pour video / chroma et status de commandes./Simboli per segnali video, chroma e sitazioni di comando./Simbolos de señales de video y croma de los status de mando./Schema symbolen voor video-/kleursignalen en status commands.

Unterschiedliche Signale auf einer Leitung/Various signals on one lead/Signaux différents sur le même cable/Segnali differenti su una linea/Señales differentes en una conducción/Verschillende signalen op één leiding:

Aufnahme / Record / Enregistrement / Registrazione / Grabación / Opname

BD. I/III-Umschaltung / BD. I/III switch-over / Commutation bande I/III / Commutazione banda I/III / Conmutación banda I/III / BD.I/III omschakeling

Wiedergabe / Playback / Reproduction / Reproduzione / Reproducción / Weergave

1,1MHz-Signal(SECAM) / 1,1MHzSignal(SECAM) / Signal 1,1MHz (SECAM) / Segnale a 1,1MHz (SECAM) / Señal de 1,1MHz (SECAM) / 1,1 MHz signaal (SECAM)

Bildformat 16:9 / Aspect ratio 16:9/standard d'ecran 16:9/ standard di schermo 16:9/estandard de pantalla 16:9/ beeldformat 16:9

Doppelte Hilfsträgerfrequenz / Double subcarrier frequency / Frequence double de la sous-porteuse / Frequenza portante ausil. doppia / Doble frecuencia de portadora auxiliar / Dubbele subcarrier frequentie

Bildformat 4:3 / Aspect ratio 4:3/Standard d´ecran 4:3/ standard di schermo 4:3/estandard de pantalla 4:3/ Beeldformat 4:3

Optokopplerimpulse / Optocoupler pulses / Impulsions tachymetriques / Impulsi optoaccoppiatore / Impulsos tacométricos / Optocouplerpuls

Rahmen / Frame / Cadre / Cornice / Marco / Frame

627kHz-Signal(PAL) / 627kHzSignal(PAL) / Signal 627kHz(PAL) / Segnale a 627kHz (PAL) / Señal de 627kHz (PAL) / 627kHz signaal (PAL)

Masse / Chassis / Massa / Masa / Massa

Bezugspotential / Reference potential/ Potentiel de réference/potenziale di riferimento/ potencial de referencia/ referentie spanning

Separate Masse / Seperate chassis connection / Connection de masse separée / Massa separata / Conección de masa separada /Separate massa

Schaltspannung bei Aufnahme/ Switching voltage for record / Tension de commutation en enregistrement / Tensione commut.in registrazione / Tension de conmutación en grabación / Schakelspanning voor opname

Von der Empfangsfrequenzeinstellung abhängige Spannung / Voltage dependent on the selected frequency / Tension de CAF / Tensione dipendente dalla regolaz. frequ. di ricezione / Tensión dependiente del ajuste de la frecuencia de recepción / Automatische frequentie controler

Regelspannung für MENUE-Signalbalken / Control voltage for MENU signal bar / Tension de régulation pour les signaux menu et mire / Tensione di regolazione per barre segnale MENU/ Tensión de regulación para barras de señal MENU / Regelspanning voor menu signaalbalken

AM/FM-Umschaltung / AM/FM switch over / Commutation AM/FM / Commutazione AM/FM / Conmutación AM/FM / AM/FM-omschakeling

Automatic Tuning Search Pegel / Automatic Tuning Search Level / Niveau de recherche automatique (ACP) / Livello ricerca automatica sint. / Nivel ATTS / Auto tuning search niveau

Status f. autom. SECAM-Umschaltung / Status f. auto SECAM switchover / Statut pour commutation automatique SECAM / Stato per commutaz. autom. SECAM / "Status" para comutación SECAM automática / Status v.autom.SECAM-omschakeling

U AUTO SEC-E — Autom. SECAM-Ost Erkennung / Autom. SECAM-EAST identification/ Détection aut. SECAM-ESTE/ Identificazione SECAM-EAST/ Identificación automatica SECAM-EAST/ Autom. SECAM-OOST herkenning

U AV — AV-Schaltspannung /AV switching voltage / Tension de commutation AV / Tensione di commutatione AV / Tensión de conmutación AV / AV schakelspanning

U EURO-AV — AV-Schaltspannung /AV switching voltage / Tension de commutation AV / Tensione di commutatione AV / Tensión de conmutación AV / AV schakelspanning

U AV-I — Status f. Schaltspannung an AV-I / Status for the switching voltage on AV-I / Statut de tension de commutation sur la prise péritélévision / Condizione per tens. di commutaz. su AV-I / Status para tensión de conmutactión en AV-I / Schakelspanning AV-I

U AV-II — Auswertung einer externen Schaltspannung / Evaluation of an external switching voltage / Analyse d'une tension de commutation externe /Valutazione di una tens. di commutaz. esterna / Evaluación de una tensión de conmutación externa / Herkenning van een externe schakelspanning

U AV-III — Schaltspannung an AV-I (abhängig v. d. Auswertung d. U-AV-II) /Switching voltage on AV-I (dependent on the evaluation of U-AV.II) /Tension de commutation sur la prise péritélévision I (dépendant de l'analyse de la tension de commutation sur la prise péritélévision II) / Tensione di commutazione su AV-I (in base alla valutazione di U-AV-II) / Tensión de conmutación en AV-I (pendiente de la analización de U-AV-II) / Schakelspanning op AV-I (afhankelijk v. d. verwerking v. d. U-AV-II)

B — Blau / Blue / Bleu / Blu / Azul / Blauw

U BD III — BD. III-Umschaltung / BD. III switch-over / Commutation bande III / Commutazione banda III / Conmutación banda III / BD. III omschakeling

BK — Burst-Key-Impuls / Burst Key pulse / Impulsion Burst-Key / Impulso Burst-Key / Impulsos de puerta de Burst / Burst Key puls

BLANK — Signalaustastung / Signal Blanking / Suppression du signal / Sopressione segnale / Supresión de señal / Signaal Blanking

U BOX/ SEC. — Schaltsignal bei DOS- bzw. OSD-Einblendungen in ein SECAM-Signal / Switching signal with DOS or OSD superimposed on a SECAM signal /Tension de commutation DOS ou OSD en SECAM / Tensione di commutazione con sovrapposizione DOS (OSD) in un segnale Secam /Tensión de conmutación de DOS o inserciones OSD sobre una señal SECAM / Schakelsignaal bij DOS of OSD invoeging in een SECAM signaal

U BOX/ SEC. — Schaltsignal bei DOS- bzw. OSD-Einblendungen in ein SECAM-Signal / Switching signal with DOS or OSD superimposed on a SECAM signal /Tension de commutation DOS ou OSD en SECAM / Tensione di commutazione con sovrapposizione DOS (OSD) in un segnale Secam /Tensión de conmutación de DOS o inserciones OSD sobre una señal SECAM / Schakelsignaal bij DOS of OSD invoeging in een SECAM signaal

U BS — Bildspeicher-Status / Field Memory Status / Status mémoire images / Status memoria immagine / Status memoria de imagen / Beeldgeheugen status

C-F R — Drehrichtung Capstan Motor / Sense of Rotation / Sens de rotation du moteur cabestan / Verso rotaz. Motore Capstan / Sentido de giro motor capstan / Draairichting Capstanmotor

CAM — Camera

CCVS — FBAS-Signal / CCVS signal / Signal Video-composite / Segnale FBAS (Video composito) / Senal completa de Videocolor / FBAS-signaal

CH — Farbsignal / Chroma signal / Signal chroma / Segnale croma / Señal de croma / Chromasignaal

U CH EP — Chroma Hüllkurve (Video) / Chroma envelope (Video) / Courbe envelopante chroma (Video) / Curva d'inviluppo chroma (Video) / Chroma-curva envolvente de video / Chroma pakket

CLK — Clockleitung / Clock line / Ligne horloge / Linea clock / Linea reloj / Clock leiding

CLOCK

CLOCK-S — Clockleitung serielle Schnittstelle / Clock line serial interface /Horloge série interface/ interfaccia seriale linea clock/ interface serie linea de clock/ Clock seriele interface

U CM — Steuerspannung Capstanmotor/ Control voltage, capstan motor/Tension de commande moteur cabestan / Tensione di comando motore capstan / Tensión de mando del motor del capstan / Stuurspanning capstanmotor

U COL B-W — Schwarz/Weiß-Farbe Schaltspannung / Black/White-Colour Switching Voltage / Tension de commutation noir/blanc - color / Tens. commut. bianco/nero-colore /Tensión de conm. b/n-colore / Zwart-Wit-kleur omschakel spanning

U COMP — Komponenteneingangssignal Y/C / Y/C component input signal/signal d´entrée composants/ Segnale dentrata componenti Y/C/ Señal d´entrada componentes Y/C / Component input signaal Y/C

CON.FM — Geregelte FM / Controlled FM / FM réglée / FM regolata / FM Regulada / Geregelde FM

CONTROL-S — Daten für Fernsteuerung über CONTROL-S-Buchse / Remote Control Data via the CONTROL-S-socket/ Données pour télécommande via la prise CONTROL-S / Dati per telecomando tramite presa CONTROL-S / Datos para el manejo a distancia a través del conector CONTROL-S / Afstandsbedienings data via de CONTROL-S ingang

U CP — U CP — Canal Plus

CTL — Synchronimpuls / Sync pulse / Impulsion Synchro / Impulso di sincronismo / Impulsos de sincronismo / Sync.puls

SYN

U CR — Stellerspannung Crispening /Threshold Voltage Crispening / Tension de réglage contours / Tensione Crispening / Tensión rep. "crispening" / Offsetspanning crispening

U CV — Status CV/ CV status/Etat CV / Condizione CV / Status CV CV Status

CV HF — CV/HF-Umschaltung / CV/RF switch-over / Commutation CV/FR / Commutazione CV/RF / Conmutación banda CV/ RF / CV/HF-omschakeling

CVS — BAS-Signal / CVS signal / Signal Video / Segnale BAS (Video) / Señal completa de Video / BAS-signaal

CVBS — FBAS-Signal / CVBS signal / Signal Video / Segnale BAS (Video) / Señal completa de Video / FBAS-signaal

DATA — Datenleitung / Data line / Ligne de données / Linea dati / Linea datos /Data leiding

DATA-S — Datenleitung Serielle Schnittstelle / Data line serial interface/ Données série interface/ interfaccia serialelinea dati/ interface serie linea de datos/ data seriele interface

U DOA — Dropout-Abschwächung / Dropout attenuation /Attenuation dropout / Attenuazione dropout / Atenuación dropout / Dropout verzwakking

U DOK — Dropout-Killerspannung / Dropout Killer Voltage / Tension de commutation dropout /Tensione di soppressione dropout / Tension de conmutación dropout / Dropout killerspanning

U DOS — Umschaltung DOS-/Video-Bild / DOS-CCVS/picture switch-over / Commutation DOS-Vidéo / Commutazione Video/ DOS / conmutación DOS/imagen de video / Omschakeling DOS-/video beeld

U DOS REC. — Untertitelaufnahme / Subtitle Recording / Enregistrement des soustitres / Registrazione sottotitoli / Grabación de subtitulos / Ondertitel opname

DS — Drum Stop-Pegel / Drum Stop Status / Niveau (tambour de tête arrête) / Livello stop tamburo / Nivel de detención del tambor / Drum stop status

DTL — Datenübernahmeleitung / Data transfer line / Ligne echange de données / Linea di transferimento dati / Linea transferencia datos / Data transfer leiding

EC-BUSY Edit-Controller Bestätigung / Edit-Controller acknowledge/ Bit de confirmation du NO d´Edit/ Abilitazione controllore edit/ reconocimiento controlador edit/ Edit processor bevestiging

EC-CLK Clock vom Central- zum Edit-Controller / Clock from Central- to Edit-Controller/Horloge du µc principal vers le µc d´Èdit/ clock dal centrale al controllore edit/ clock central a controlador edit/Clock van centrale-naar Edit processor

U EDIT Edit Status / Edit Status / Status Edit / Stato Edit / Status Edit /Edit Status

EDIT1 / EDIT2 Daten vom Central- zum Edit-Controller / Data from Central- to Edit-Controller/ Donneés du µc principal vers le µc d´Edit/ dati dal centrale al controllore edit/ datos central a controlador edit / Data van centrale naar Edit processor

U EE Durchschleifbild / EE-Betrieb / Loop through video / EE-mode

U EN-FB Freigabe des Fastblank Impuls / Fast blank pulse enable / Validation impulsion blanking / Consenso dell' impulso del bianco / Enable impulso Fastblanking / Vrijgave voor fastblanking impuls

F Bildimpuls / Fieldpulse / Impulsion trame / Impulso di quadro / Impulsos de cuadro / Beeld puls

F1 / F2 Heizung F1/F2/ Filament F1/F2 / Filament F1/F2 / filamento caldo F1/F2/ filamento de calefacción F1/F2/ Gloeispanning F1/F2/

U FCT Funktion-Ein-Status / Function "ON" status / Statut marche / Funzione inserita /Activación tensión / Functie ,"0N" status

$F_{H/2}$ Halbe Zeilenfrequenz / Half line frequency / Fréquence demie ligne / Frequenza di riga dimezzata/ Semifrequencia de línea / Halve lijnfrequentie

FLY ER Rotierender Löschkopf / Flying erase head / Tête d'effacement rotative / Testina cancellazione rotante / Cabeza rotativa de borrado / Roterende wiskop

FM-P FM-Bild / FM picture / Image - FM / Immagine FM / FM de imagen / FM-Beeld

U FMEP FM-Hüllkurve Bild / FM envelope picture / Envelope FM image / Inviluppo video FM / Envolvente de FM de imagen

U_{FMPI} FM-Bild-Kennung / FM picture identification / Identification Video / FM/Identificazione Video/FM / Identificación FM imagen / FM picture identificatie

FSC Hilfsträgerfrequenz / Subcarrier frequency / Fréquence de la sous-porteuse / Frequenza portante ausil. / Frecuencia de portadora auxiliar / Subcarrier frequentie

G Grün / Green / Vert / Verde / Groen

U H Zeilen-Eintastung / Line insertion / Insertion ligne / Inserimento di riga / Inserción de linea / Line insertion

H

U HEIM Heimlauf / Automatic unthread on switch off / Degament auto.par inter M/A / Sgancio autom. con spegnimento / Desenhebrado preventivo / Automatisch uitrijgen bij uitschakelen

HF AV HF/AV-Umschaltung / RF/AV switch.over / Commutation HF/AV / Commutazione HF/AV / Conmutacion banda HF/AV / HF/AV -omschakeling

HF/CV AV HF/CV-AV-Umschaltung / RF/CV-AV switch-over / Commutation HF/CV-AV / Commutazione HF/CV-AV / Conmutacion banda HF/CV-AV / HF/CV-AV-omschakeling

HI-CH Kopfumschaltimpuls-Chroma / Chroma head switching pulse / Impulsion de commutation tête/chroma / Impulso di commutazione testina/Croma / Conmutación cabezas de croma / Video head switching puls chroma

HI-P Kopfumschaltimpuls-Bild / Video head switching pulse / Impulsion de commutation tête image / Impulso di commutazione testina video / Conmutación de cabezas de video / Video head switching puls

U HWM Steuerspannung Kopfradmotor / Control voltage, headwheel motor / Tension de commande moteur tambour de têtes / Tensione di comando motore ruota testine / Tensión de mando del motor del volante de cabezas / Stuurspanning drummotor

U HWM

IF ZF-Signal / IFsignal / Signal FI / Segnale FI / Señal de FI / MF-signaal

U KOIN. Koinzidenz-Spannung / Coincidence voltage / Tension de coincidence / Tensione di coincidenza / Tensión de coincidencia / Coïncidence spanning

U KOIN.

U LP Longplay-Umschaltung / Longplay switchover / Commutation longue duree / Commutazione longplay / Commutación a longplay / Longplay-omschakeling

NP LP

EP LP Umschaltung Standard/Long/Economy-Play/ Commutation LP-EP/ Commutazione SP-LP-EP/ Conmutación LP-EP/ Omschakeling Standaard-/ Long-/ Economy-play

LP REC Status bei Longplay Aufnahme / Status at longplay record/ status LP-enregistrement/ stato di registrazione longplay/ status LP en grabación/ Status bij Longplay opname

U LP-TRICK LP-Trick status / LP-trick status/ Effets spéciaux LD/ stato trick-LP/ Efectos especiales LP/ LP trick status

MIX.SYN Synchrongemisch / Mixed sync. / Signeaux synchro / Sincronismo O/V / Sincronismos H/V / Mixed synchroon

U NTSC NTSC-Status / Status NTSC / Etat NTSC / Condizione NTSC / Status NTSC / NTSC-Status

U NTSC

NTSC PAL NTSC-PAL Umschaltung/NTSC-PAL switch over/ Commutation NTSC-PAL/ Commutazione NTSC-PAL/ Conmutación NTSC-PAL/ NTSC-PAL omschakeling

OE Ausgangsfreigabe / Output enable / Validation sortie / Consenso di uscita/ Habilitación salida / Output enable

U PAL PAL/NTSC

U PAY-TV Pay-TV-Schaltspannung / Pay TV switching voltage / Tension de consommation / tele à péage / Tensione di commutazione TV a pagamento / conmutación a TV de peaje / Pay TV schakelspanning

PB Wiedergabe-Status / Playback status / Status reproduction / Stato riproduzione / Status reproducción / Weergave status

U PB

PB-FM Wiedergabe FM / Playback FM / Reproduction FM / Riproduzione FM / Reproducción FM / Weergave FM

U PIC Bildkontrolle / Picture Control / Contrôle de contour image / Controllo definizione dell' immagine / Control de imagen / Picture control

U PL.CO

PIP Bild im Bild / Picture in picture / Image en image / Immagine nell´immagine / Imagen en imagen / Beeld in beeld

PLL SYNC Synchron Impuls von HPLL / Sync pulse from HPLL /Impulsion synchro de HPLL / Impulso di sincronismo di HPLL / Impulso de sincronismo de HPLL / Sync. puls van HPLL

U PS Regelumschaltung bei BSL / Control switching during picture search / Tension de commutation en recherche visuelle / Tensione di regolazione durante la ricerca immagine / Conmutación a búsqueda de imagen /Controle omschakeling tijdens picture search

R Rot / Red / Rouge / Rosso / Rojo / Rood

RE-Status / RE status / Status RE / Stato RE / Status RE / RE status

Aufnahme-Status / Record status / Status enregistrement / Stato di registrazione / Status de grabación / Opname status

Reset-Impuls / Reset pulse / Impulsion de reset / Impulso reset / Impulso de reset / Reset puls

HF-Aufnahmespannung / RF record voltage / Tension d´enregistrement HF / Tensione di registrazione HF / Status de grabación RF / HF-Opname spanning

Auslesetakt / Read out clock / Fréquence de echantillonage / Cadenza di analis / Frecuencia de lectura / Systeem clock

VHS/S-VHS Umschaltung / VHS/S-VHS Switching / CommutationVHS/S-VHS / Commutatione VHS/S-VHS / Conmutación VHS/S-VHS / VHS/S-VHS omschakeling

SAT Hub / SAT deviation / Excursion SAT / Deviazione SAT / Excursión de SAT / SAT zwaai

SAT (Satellit)-Mute-Kennung / SAT (Satellite) Mute identification / Identification mute SAT / Identificazione silenziamento SAT / Código de silenciación SAT (satélite) / SAT (Satelliet) Mute identificatie

SAT Mute / SAT mute / Silence SAT / Silenziamento SAT / Mute SAT / SAT mute

Sand castle

Serielle Clockleitung / Serial clock line / Ligne horloge serielle / Linea clock seriale / Linea serie de reloj / Seriële klok leiding

I²C-Bus-Clockleitung / I²C Bus clock line / Ligne horloge Bus I²C / Linea clock I²C-Bus / Linea reloj del Bus I²C / I²C-Bus-klok leiding

Schaltspannung "Scrambler" / "Scrambler" switching voltage /Tension de commutation "décodeur" / Tensione di commutazione "Scrambler" / Tensión de conmutación "Scrambler" / "Descrambler" schakelspanning

I²C-Bus-Datenleitung / I²C Bus data line / Ligne de données Bus I²C / Linea dati I²C-Bus / Linea datos del Bus I²C / I²C Bus data leiding

Status SECAM Ost / Status SECAM east / Statut SECAM EST / Stato SECAM EST / Status SECAM oriental / Status SECAM oost

Status SECAM West / Status SECAM west / Statut SECAM Ouest / Stato SECAM ovest / Status SECAM occidental / Status SECAM west

SECAM

Serielle Dateneingabe / Serial data input / Entree serielle de données / Ingresso dati seriali / Entrada serie de datos / Seriële data input

Serielle Datenausgabe / Serial data output / Sortie serielle de données / Uscita dati seriali / Salida serie de datos / Seriële data output

Kopfumschaltimpuls-Standbild / Head switching pulse for freezeframe / Impulsion de commutation pour "Arrêt sur image" / Impulso commutaz. testine per fermo immagine / Impulso de conmutación de cabezas en paro de imagen / Video head switching puls voor stilstaandbeeld

Standbildoptimierung / Freezeframe optimisation / Optimisation de l'arrêt sur image / Ottimizzazione fermo immagine / Optimización de la imagen fija

Standbild / Still picture / Arrêt sur image / Fermo immagine / Imagen parada / Stilstaand beeld / Stilstaand beeld optimalisering

S-VHS Wiedergabe / S-VHS Playback / Lecture S-VHS / Riproduzione S-VHS / Reproducción S-VHS / S-VHS weergave

Normumschaltung / Standard switch - over / Commutation norme / Commutazione de norma / Conmutación de norma / Norm omschakeling

Datenübernahmeimpuls / Data Transfer Pulse / Impulsion de transfert de données / Impulso trasferimento dati / Impulso de transferencia de datos / Data transfer puls

S-VHS Erkennung / S-VHS detection voltage / Identification S-VHS / Identificazione S-VHS / Detección S-VHS / S-VHS erkenning

FM-Hüllkurve Bild S-VHS / FM Envelope Video S-VHS / Envelope FM image S-VHS / Inviluppo video FM S-VHS / Envolvente de FM de imagen (S-VHS) / FM-Pakket S-VHS

Schwaz/Weiß-Schaltspannung / Black/White-Switching Voltage / Tension de commutation noir/blanc / Tens. commut. bianco/nero / Tensión de conm. b/n / Zwart/Wit schakelspanning

SECAM-OST/WEST-Abfragespannung / SECAM EAST/WEST scanning voltage / Tension d´identification Secam FR/Secam ME / Tensione di richiesta SECAM-EST/OVEST / Tensión de encuesta SECAM ESTE/OESTE / SECAM oost/west scan-spanning

Bandende / End of tape / Fin de bande / Fine nastro/ Final de cinta /Einde band

Schaltspannung für Testbildgenerator / Switching voltage for testpattern generator / Tension de commutation mire / Tensione di commutazione per generatore di prova / Activación del generador de prueba / Schakelspanning voor testbeeld generator

Einfädeln / Threading / Engagement de bande / Caricamento del nastro / Enhebrado / Inrijgen

Transcoder Betrieb / Transcoder mode / Mode transcoder / Modo transcoder / Modo transcoder / Transcoder mode

Bandanfang / Start of tape / Debut de bande / Inizio nastro / Principio de cinta / Begin band

Bandanfang-/Bandende-Kennung / Tape start/tape end detection / Identification debut/fin de bande / Identificazione inizio/fine nastro / Identification de principio o fin de cinta / Begin band-/einde band detectie

Bandzug-Spannung / Tape tension voltage / Tension de bande / Tensione nastro / Tensión de cinta / Tape tension regelspanning

Abstimmspannung / Tuning voltage / Tension d´accord / Tensione di sintonia / Tensión de sintonía / Afstemmings spanning (voltage)

UHF.Umschaltung / UHF switch-over / Commutation UHF / Commutazione UHF / Conmutación banda UHF / UHF - omschakeling

Ungeregelte FM v. Band / Uncontrolled FM from the tape / FM de bande non contrôlé / FM non regolata da nastro / no areglado FM de la cinta / Ongeregelde FM van tape

Ausfädeln / Unthreading / Degagement de bande / Scaricamento del nastro / Desenhebrado / Uitrijgen

Bild- oder eingetasteter V-Impuls / Vertical sync pulse or inserted V-pulse / Signal synchro vertical image ou signal synchro vertical artificiel / Impulso sincro verticale oppure inserimento sincro verticale / Impulso vertical o impulso de sincro vertical / Raster of inserted V-puls

V-Eintastung / V insertion / Insertion V / Inserimento V / Inserción V / V-insertion

Freigabe für V-Eintastung / Field insertion enable / Validation impulsion V / Consenso per inserimento V / Habilitacion inserción V / Vrijgave voor V-insertion

VHF-Umschaltung / VHF switch over / Commutation VHF / Commutazione VHF / Conmutación banda VHF / VHF - omschakeling

FM-Hüllkurve Bild VHS / FM Envelope Video VHS / Envelope FM image VHS / Inviluppo video FM VHS / Envolvente de FM de imagen (VHS) / FM-Pakket VHS

FM-Hüllkurve / FM-Envelope

StatusVPS/Videotext / Status VPS/Teletexte / Stato VPS/ Televideo / Status VPS/Teletexto / Status VPS/teletekst

Steuerspannung Wickelmotor / Control voltage , winding motor / Tension de commande moteur / Tensione di comando motor / Tensión de mando del motor / stuurspanning spoelmotor

Bild-WR-Status / Video WR status / Status WR Video (enregistrement/lecture) / Stato Video / Status grabación / reproducción Video / Beeld WR status

Y-Eintastung / Y insertion / Insertion Y / Inserimento Y / Inserción Y / Y-insertion

Schaltsymole für Audiosignale-Statusbefehle / Circuit diagram symbols for Audio signals / Status commands Symboles sur schema pour commandes de statut / Audio /Simboli di comando Audio / Simbolos de las señales de Audio y status de mando / Schema symbolen voor Audio signalen en Status commandos

Aufnahme-Empfindlichkeit, linker Kanal / Record sensitivity, left channel / Niveau d'enregistrement, canal gauche / Sensibilità di registrazione, canale sinistro / Nivel grabación, canal izquierdo / Opname niveau linker kanaal

Aufnahme-Empfindlichkeit, rechter Kanal / Record sensitivity, right channel / Niveau d'enregistrement, canal droit / Sensibilità de registrazione, canale destra / Nivel grabación, canal derecho /Opname niveau, rechter kanaal

Meßwertanzeige, analog links / Meter reading,analog left / Indicateur de modulation analogique, gauche / Indicazione valore di misura analogico, sinistra / Indicador de nivel izquierdo / Meterwaarde analoog links

Meßwertanzeige, analog rechts / Meter reading, analog right / Indicateur de modulation analogique, droit / Indicazione valore di misura analogico, destra / Indicadorde nivel, derecho / Meterwaarde analoog rechts

Zwei-Ton-Status / 2-channel sound status / Statut double son / Stato doppio Audio / Status sonido dual / 2-Kanaal geluid status

Mikrofon-Eingang / Microphone input / Entrée micro / Ingresso microfono / Entrada micrófono / Microfoon ingang

Wiedergabe-Status / Playback status / Status reproduction / Stato riproduzione / Status reproducción / Weergave status

Nullpunkt-Einstellung der Audio-Anzeige / Zero adjustment of audio indicator / Point zéro affichage audio / Regolazione zero dell'indicazione Audio / Punto cero indicador de audio / Nulpunt instelling voor audio indicator

Verzögerte Regelspannung / Delayed control voltage / Tension de regulation retardée / Tensione di regolazione ritardata / Tensión diferida de cag / Vertraagde stuurspanning

Automatische Verstärkungsregelung / AGC (Automatic Gain Control) / Contrôle automatique du gain / Regolazione automatica di amplificazione / Regulación automática de la amplificación / Gain control

Canal Plus-Signal für Audio / "Canal plus" signal for audio / signal Canal Plus pour audio / Segnale canal-plus per audio / Señal de Canal Plus para audio / "Canal plus" signaal voor audio

Audiosignal, links /Audio signal, left / Signal Audio, gauche / Segnale Audio, sinistro / Señal de Audio, izquierda / Audiosignaal, links

Audiosignal, rechts /Audiosignal, right / Signal Audio, droit / Segnale Audio, destro / Señal de Audio, derecha / Audiosignaal, rechts

Audiosignal, Mono / Audio signal, Mono / Signal Audio, Mono / Segnale Audio, Mono / Señal de Audio, Mono / Audiosignaal, Mono

Automatik/Manuell-Umschaltung /Automatic/manuel switch-over / Commutation automatique/manuel / Commutazione automatica/manuale / Conmutación automatica manual /Automatic/Manuel omschakeling

Status Tonkanal 1,2 / Sound channel 1,2 status / Statut canal 1,2 / Stato canale Audio 1,2 / Status canal 1,2 sonido dual/ Geluidkanaal 1,2 status

Kanal 1 , Kanal 2, Stereo / Channel 1 ,channel 2, Stereo / Canal 1 ,canal 2, Stereo / Canale 1 , canale 2, Stereo / Kanaal 1 , Kanaal 2,Stereo

Ansteuerung Eingangswahlschalter / Control input select switch / Commande de sélecteur entrand / Selettore ingresso pilotagio / Exitación del selector de entradas / Stuuringang keuze schakelaar.

Nachvertonung / Dubbing / Postsonorisation / Postsonorizzazione / Sonorización posterior / Dubbing

Ton-Ein-/Ausblendung / Sound fade-in/fade-out / Arrivée et disparition progressive du son / Audio inserito/escluso / Inserción/desinserción de sonido / Geluid fade-in/fade-out

FM-Ton-Status / FM sound status / Statut Audio FM / Stato AudioFM / Status sonido FM / FM-Geluid status

Audio FM-Signal vom Band / Audio FM-signal from tape/ signal Audio FM relu/ segnale audio - FM dal nastro/ señal audio FM de cinta/ Audio FM signaal van tape

FM-Ton / FM sound / Son FM /Audio FM / Sonido FM / FM-Geluid

FM Hüllkurve Ton / FM envelope, sound / Courbe envelopante audio FM / Curva d'inviluppo FM audio / FM-curva envolvente de sonido / FM-Pakket HIFI

FM-Ton-Kennung / FM sound identification / Identification Audio FM / Identificazione Audio FM / Identificación sonido FM / FM geluid identificatie

Status f. Aufn. FM-Ton / FM sound record status / Statut pour enregistrement son FM / Stato di registrazione Audio FM / Status grabación sonido FM / FM geluid opname status

Audio FM-Signal zum Band /Audio FM-signal to tape/Audio signal FM enregistrement/ segnale audio-FM per il nastro/ señal audio FM grabación/Audio FM signaal naar tape

Pegelautomatik -Abschaltung und Rücksetzung /Automatic Level Control - switch-off and reset / Contrôle automatique de niveau - Arrêt et reset / Livello automatico-disinserimento e reinserimento / Nivel automatica - desconección y Reset / Automatische level controle-uitschakeling en Reset

Frankreich Band I / France band I / France bande I / Francia banda I / Banda I Francesa / Frankriik band I

Hauptlöscher / Full-track erase / Tête d´effacement pleine piste / cancellazione completa / Borrado total / Fulltrack wiskop

U FTE — Status Hauptlöscher / Status Mains Erase System / Etat effacem. principal / Stato cancellatore totale / Status de

Ū FTE — borrado total / Status Fulltrackwiskop

U HF-GEN — Generator-Steuerspannung / Generator control voltage / Tension de commande générateur / Tensione controllo generatore / Tensión de control del generator / Generator stuurspanning

HI-OUT — Kopfumschaltimpuls Ton-Ausgang / Head switching pulse audio out / Impulsion de commutation de tête sortie audio / Impulso commutaz. testine - uscita audio / Salida impulse conmutación cabeza sonido / Head switching puls audio out

HI-S — Kopfumschaltimpuls-Ton / Sound head switching pulse / Impulsion de commutation tête/son / Impulso di commutazione testina Audio/Conmutación cabezas de sonido / Geluid head switching puls

HIFI-L — HIFI-Ton links / HIFI sound left / Son HIFI gauche / Audio HIFI sinistro / Sonido HIFI izquierda / HIFI-Geluid links

HIFI-R — HIFI-Ton rechts / HIFI sound right / Son HIFI droit / Audio HIFI destro / Sonido HIFI derecha / HIFI-Geluid rechts

U LM — Stellerspannung "Master"-Pegel / Threshold Voltage "Master"-Level / Tension de réglage du niveau "Master" / Tensione livello "Master" / Tensión para nivel "Master" / Offset-spanning masterlevel

U LO — Stellerspannung Ausgangspegel / Threshold Voltage Output Level / Tension de réglage niveau de sortie / Tensione livello d'uscita / Tensión nivel de salida / Offset-spanning uitgangslevel

Ū MD — Microvertonung / Microphone dubbing / Sonorisation micro / Doppiaggio con microfono / Sonorización micro / Microfoon dubbing

U MICRO — Schaltspannung für Mikrofon / Micro Switching Voltage / Tension de commutation pour micro /Tensione di commutazione microfono / Tensión de conmutación para micrófono -/ Schakelspanning voor microfoon

MIX — Schaltspannung Mix-Betrieb / Switching Voltage Mix-Mode /Tension de commutation fonction mix / Tens. commut. funzionam. Mix / Tensión conmutatión modo MIX / Schakelspanning Mix gebruik

U MUTE — Stummschaltung / Muting / Circuit de silence / Silenziamento

Ū MUTE — / Silenciador / Muting

Ū MUTE EUAV — Stummschaltung Ton EURO-AV / Muting sound EURO-AV / Circuit silence son EURO-AV / Silenziamento audio EURO-AV / Silenciador sonido EURO-AV / Muting geluid EURO-AV

NICAM — Nicam

NORM. — Normalton / Normal Sound / Son normal / Audio normale / Sonido normal/Normaal geluid

U PAR — Parallelvertonung / Parallel dubbing / Synchronisation simultanée / Sonorizzazione parallela / Sonorización paralela / Parallel weergave

PB — Audio-Wiedergabe-Signal v. A/W-Kopf / Audio playback signal from R/P head / Tête Audio / Mode lecture / Riproduzione Audio segnale dalla testina R/A / Reproducción (cabeza de Audio) /Audio weergave signaal naar opname-/weergavekop

Ū PB/T-M — Wiedergabe Trick-Mix / Switching Voltage Playback Trick-Mix / Tension de commutation lecture Trick mix / Tens. commut. riprod.Trick-Mix / Tensión conm. repro/trick-mix / Weergave Trick Mix

U RAF — Aufnahme-Umschaltung / Record switch-over / Commutation enregistrement / Commutazone-registrazione / Conmutación de grabación / Opname omschakeling

REC — Audio-Aufnahme-Signal z. A/W-Kopf / Audio record signal to R/P head / Tête Audio / mode d´enregistrement / Registrazione Audio segnale alla testina R/A / Grabación (cabeza de Audio) / Audio opnamesignaal naar opname-/ weergavekop

U REC — Aufnahme-Umschaltung / Record switch-over /

Ū REC — Commutation enregistrement / Commutazone-registrazione / Conmutación de grabación / Opname omschakeling

REC PB — Aufnahme/Wiedergabe-Umschaltung / Record/playback switching/Commutation enregistrement/lecture / Commutaz.

U PB REC — registrazione / riproduzione / Conmutación grab/repro / Opname/Weergave omschakeling

SAT-SID — SAT (Satellit)-Tonkennung / SAT (Satellite) sound identification / Identification son SAT / Identificazione audio SAT/ Código de sonido SAT (satélite) / SAT (Satelliet) Geluid identificatie

SE — Tonlöscher / Sound erase / Effacement son / Cancellazione Audio / Borrado sonido / Geluid wiskop

Ū SE — Status Tonlöscher / Status Sound Erase / Etat effacem. audio / Stato cancellatore audio / Status de borrado de sonido / Status geluidwiskop

U TRICK — Status Trick / Function truquage / Situaz. effetto speciale / Status truco / Status Trick

U WR-A — Ton-WR-Status / Sound WR status / Statut WR Audio (enregistrement/lecture) / StatoAudio WR / Status

Ū WR-A — Grabación/reproducción sonido / Geluid WR status

WR — WR-Status / WR status / Statuts WR / Stato WR / Status WR / WR status

WT1 — Tacho Wickelteller links / Tacho generator, left spindle / Générateur tachymétrique du plateau porte-bobine gauche / Piattello avvolg.tachim.sinistro / Tacometro del portacarrete izquierdo / Tacho generator, links

WT2 — Tacho Wickelteller rechts / Tacho generator, right spindle / Générateur tachymétrique du plateau porte-bobine droit / Piattello avvolg.tachim.destro / Tacometro del portacarrete derecho / Tachogenerator, rechts

Schalterbezeichnungen / Switch designations / Désignation des contacts/ Denominazioni degli interruttori / Denominación de contactos / Schakelaar benaming

CL 1
CL 2 — Cassettenladekontakte / Cassette loading contacts / Contacts de positionnement logement cassette/ Contatti caricamento cassetta / Contactos del portacassette / Cassette loading contact

CS — Zählschalter / Counter switch / Contact de comptage / Interruttore di conteggio / Contacto contador / Teller schakelaar

CPS — Cassettenschachtkontakt / Cassette compartment switch / Contact logement cassette / Contatto vano cassetta / Posición del portacassetta / Cassette compartiment schakelaar

REC — Aufnahmesperre / Record lock / Sécurité d'enregistrement / Blocco di registrazione / Bloqueo de grabación / Opname vergrendeling

PIS — Identifikationsschalter / Identification switch / Commutateur d'identification / Interruttore di identificazione / Contacto identificación / Identificatieschakelaar

INIT — INIT.-Schalter / Deck switch / Commutation deck / Commutazione deck / Conmutador deck / Deck schakelaar

Kopfbezeichnungen / Head designations / Désignation des têtes / Denominazione delle testine / Abreviaturas de las cabezas / Kopbenamingen

AWK Aufnahme-/Wiedergabekopf / Record/playback head /Tête combinée enregistrement/lecture / Testina di registrazione / riproduzione / Cabeza de registración/reproducción / Opname-/Weergavekop

CTL Synchronkopf / Sync head / Tête synchro / Testina di sincronismo / Cabeza de sincronismo / Synchroonkop

TLK Tonlöschkopf / Sound erase head / Tête d'éffacement son / Testina di cancellazione audio / Cabeza de borrado de sonido / Geluid wiskop

HLK Hauptlöschkopf / Full-track erase head / Tête d'éffacement pleine piste / Testina de cancellazione completa / Cabeza de borrado total / Full-track wiskop

Sensoren-Abkürzungen / Sensor abbreviations / Abréviations de détecteurs / Abbreviazioni usate per i sensori / Abreviaturas empleadas para sensores / Sensoren afkortingen

WPL / Tacho Wickelteller links / Tacho generator, left spindle / Générateur tachymétrique du plateau WM1 porte-bobine gauche / Piattello avvolg.tachim.sinistro / Tacometro del portacarrete izquierdo / Tacho generator, linkse spoelschotel

WPR / Tacho Wickelteller rechts / Tacho generator, right spindle / Générateur tachymétrique du plateau WM2 porte-bobine droit / Piattello avvolg.tachim.destro / Tacometro del portacarrete derecho /Tacho generator,rechtse spoelschotel

TAS Bandanfang / Start of tape / Debut de bande / Inizio nastro / Principio de cinta / Begin band

TAE Bandende / End of tape / Fin de bande / Fine nastro / Final de cinta / Einde band

FTA Fädeltacho / Threading tacho / Tacho enfilage / Impulsi di caricamento / Taco de enhebrado / Inrijgtacho

Spannungs-Abkürzungen / Voltage abbreviations / Abréviation des tensions / Abbreviaz. delle tensioni / Abreviaturas de las tensiones / Spanningen afkortingen

...V_D Dauerspannung / Unswitched voltage / Tension permanente /Tensione permanente / Tensión permanente / Continu spanning

...V_{DM} Dauer-Motor-Spannung / Unswitched motor voltage / Tension permanente moteur / Tensione permanente motore / Tensión permanente motor / Continu motor spanning

...+V_A Aufnahmespannung / Record voltage / Tension d'enregistrement / Tensione di registrazione/ Tensión en grabación / Opname spanning

...+V_W Wiedergabespannung / Playback voltage / Tension lecture / Tensione di riproduzione/ Tensión en reproducción / Weergave spanning

...V_F Funktionspannung / Function voltage / Tension de fonctionnement / Tensione de regime / Tensión funciones / Funktie spanning

...V_{AHF} HF-Aufnahmespannung / RF record voltage / Tension d´enregistrement HF / Tensione di registrazione HF/Status de grabación RF/ HF-Opname spanning

...VD $_{UHR}$ Dauer-Uhr-Spannung / Unswitched clock voltage / Tension permanente horloge / Tensione permanente orologio / Tensión permanente reloj / Continu klok spanning

...V_E EIN-Spannung (Ein-/Ausschalter gedrückt) / "Machine-on" voltage (ON/OFF switch pressed) / Tension de marche (touche M/A enclenchée) / Tensione d'accensione (interr. accens./spegn.premuto) / Tensión "En Marcha" (interruptor pulsado) / Inschakel Spanning (Aan/Uit druk schakelaar)

...V_B Buchsenspannung / Socket voltage / Tension embase / Tensione presa / Tensión en conector / Socket-spanning

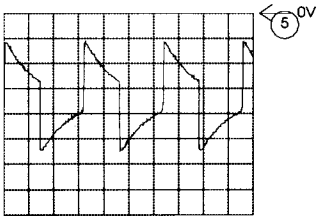

A: DC, 5 V/Div, 10us/Div
Connector 1509 Pin 2

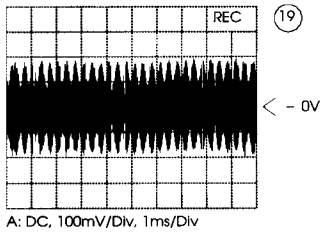

A: DC, 100mV/Div, 1ms/Div
Connector 1637 Pin 12

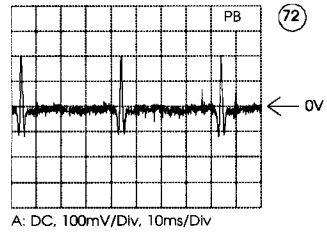

A: DC, 100mV/Div, 10ms/Div
Connector 1501 Pin 5

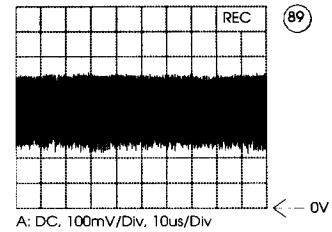

A: DC, 100mV/Div, 10us/Div
Connector 1530 Pin 6

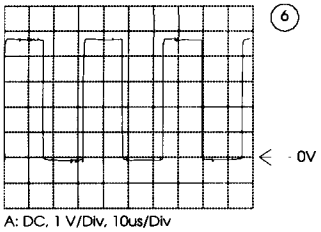

A: DC, 1 V/Div, 10us/Div
Connector 1509 Pin 3

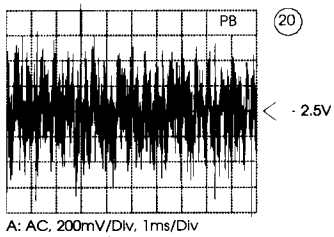

A: AC, 200mV/Div, 1ms/Div
Connector 1637 Pin 14

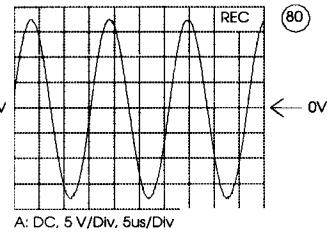

A: DC, 5 V/Div, 5us/Div
Connector 1503 Pin 1

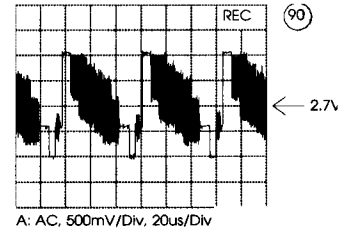

A: AC, 500mV/Div, 20us/Div
Connector 1526 Pin 9

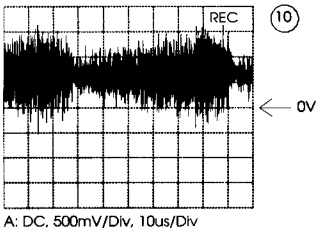

A: DC, 500mV/Div, 10us/Div
Connector 1624 Pin 10

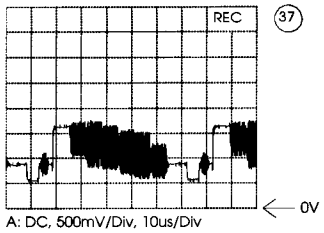

A: DC, 500mV/Div, 10us/Div
Connector 1638 Pin 12

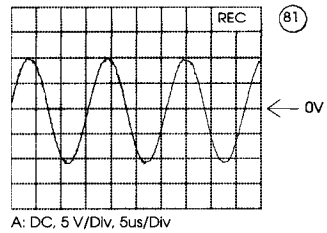

A: DC, 5 V/Div, 5us/Div
Connnector 1503 Pin 4

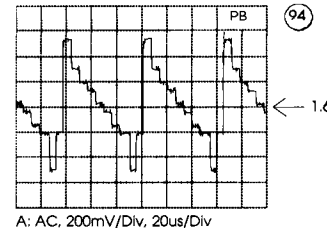

A: AC, 200mV/Div, 20us/Div
Connector 1526 Pin 11

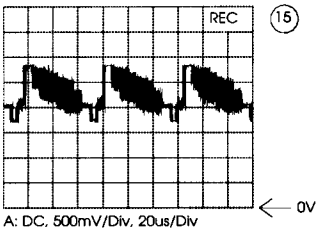

A: DC, 500mV/Div, 20us/Div
Connector 1624 Pin 5

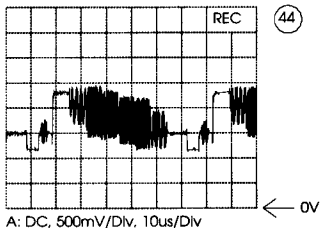

A: DC, 500mV/Div, 10us/Div
Connector 1638 Pin 10

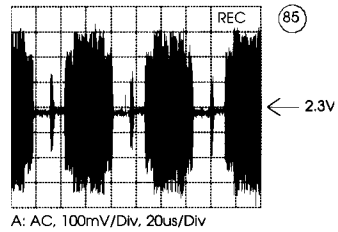

A: AC, 100mV/Div, 20us/Div
Connector 1524 Pin 2

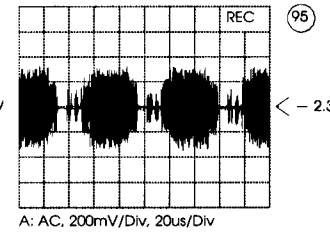

A: AC, 200mV/Div, 20us/Div
Connector 1526 Pin 13

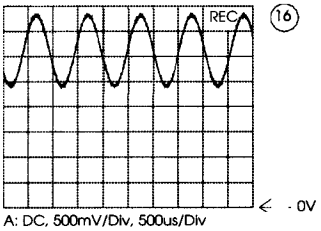

A: DC, 500mV/Div, 500us/Div
Connector 1625 Pin 9

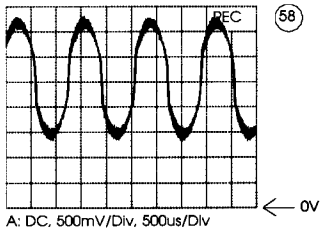

A: DC, 500mV/Div, 500us/Div
Connector 1502 Pin 4

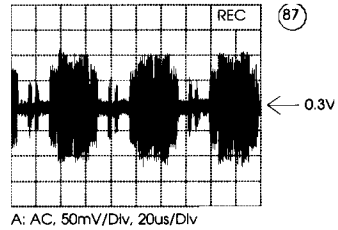

A: AC, 50mV/Div, 20us/Div
Connector 1530 Pin 2

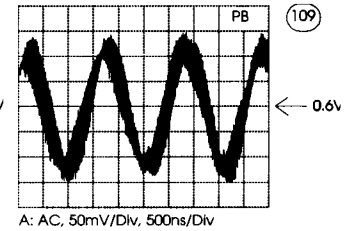

A: AC, 50mV/Div, 500ns/Div
Connector 1525 Pin 15

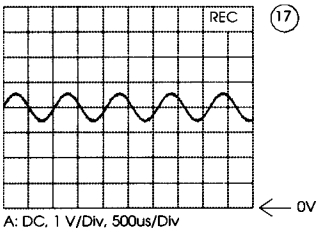

A: DC, 1 V/Div, 500us/Div
Connector 1637 Pin 5

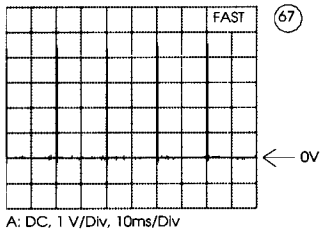

A: DC, 1 V/Div, 10ms/Div
Connector 1530 Pin 9

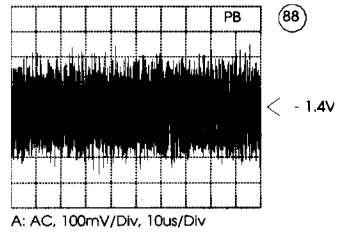

A: AC, 100mV/Div, 10us/Div
Connector 1530 Pin 4

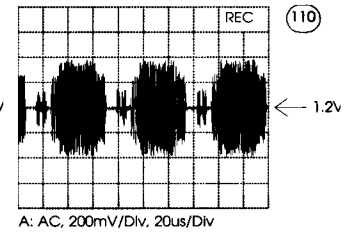

A: AC, 200mV/Div, 20us/Div
Connector 1525 Pin 14

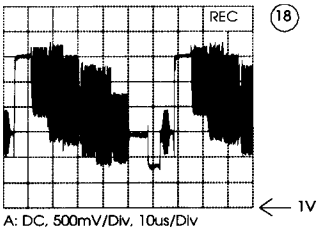

A: DC, 500mV/Div, 10us/Div
Connector 1638 Pin 7

Interconnections:

PS page 3-27	SE page 3-35	DE page 3-38	VP page 3-41	VT page 3-46	SF page 3-53
FE page 3-29/31	HC page 3-36	OS page 3-39	IO page 3-44	CF page 3-50	SP page 3-54
TM page 3-34	VS page 3-37	CC page 3-40	AU page 3-45	SH page 3-51	DC page 3-57...